服务热线

+86 18066369992
+86 18064799377

扫码咨询/Wechat

扫码查看 企业站
Enterprise website

ID:konovalve

浙江科诺阀门有限公司
ZHEJIANG KONO VALVE CO., LTD

地址 温州市龙湾区滨海园区滨海八路528号
电话 0577-8638 8699
传真 0577-8638 8199
邮箱 konovalve@163.com
Q Q 9691776
网站 www.konovalves.com

Address: No. 528, Binhai 8th Road, Binhai Industrial Park, Longwan District, Wenzhou City
Tel: +86 0577-8638 8699
Fax: +86 0577-8638 8199
Email: konovalve@163.com
Q Q: 9691776
Website: www.konovalves.com

CHNKONO®
科诺阀门

全系列高平台球阀智造商

INTELLIGENT MANUFACTURER OF ALL SERIES OF HIGH LEVEL BILLIARDS VALVES

锻钢球阀系列 法兰球阀系列 三通球阀系列 三片式球阀系列 无滞留球阀系列
国标 美标 德标 日标 非标定制

Forged steel ball valve series, flange ball valve series, three-way ball valve series,
three piece ball valve series Non stagnant ball valve series
National standard, American standard, German standard, Japanese standard, non-standard customization

HIGH-PLATFORM GB FLANGE BALL VALVE

高平台国标法兰球阀

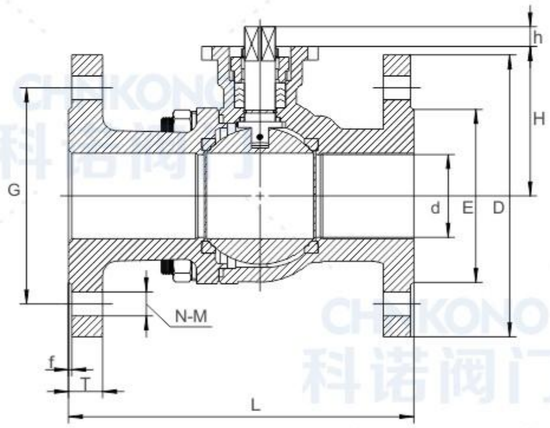

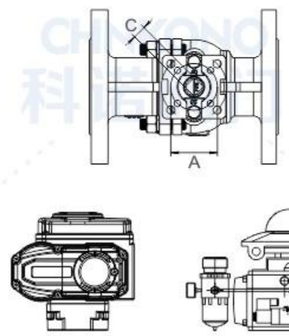

电动执行器附件
Electric actuator accessories

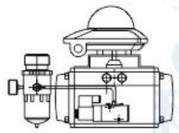

气动执行器附件
Pneumatic actuator accessories

手柄附件
Handle attachment

国标设计标准

法兰连接：HG/T-20592、GB/T-9113
结构长度：GB/T-12221
壁厚标准：GB/T-26640
设计制造：GB/T-12237
检验试验：GB/T-26480

National Design Standards

Flange connection: HG/T-20592, GB/T-9113
Structural length: GB/T-12221
Wall thickness standard: GB/T-26640
Design and Manufacturing: GB/T-12237
Inspection and testing: GB/T-26480

GB DN15-DN40 PN16-PN40

规格	PN	D	L	d	E	G	T	F	H	N-ΦM	A	C	h
DN15	PN16-40	95	130	15	45	65	16	2	51	4-Φ14	F04-F05	9*9	9
DN20	PN16-40	105	130	20	58	75	18	2	54	4-Φ14	F04-F05	9*9	9
DN25	PN16-40	115	140	25	68	85	18	2	67	4-Φ14	F04-F05	11*11	11
DN32	PN16-40	140	165	32	78	100	18	2	72	4-Φ18	F04-F05	11*11	11
DN40	PN16-40	150	165	40	88	110	18	2	78	4-Φ18	F05-F07	14*14	14

GB DN50-DN200 PN16

规格	PN	D	L	d	E	G	T	F	H	N-ΦM	A	C	h
DN50	PN16	165	203	50	102	125	18	2	88	4-Φ18	F05-F07	14*14	14
DN65	PN16	185	222	65	122	145	20	2	116	4-Φ18 8-Φ18	F07-F10	17*17	17
DN80	PN16	200	241	76	138	160	20	2	122	8-Φ18	F07-F10	17*17	17
DN100	PN16	220	305	100	158	180	22	2	153	8-Φ18	F07-F10	22*22	22
DN125	PN16	250	356	125	188	210	22	2	174	8-Φ18	F10-F125	22*22	22
DN150	PN16	285	394	150	212	240	24	2	210	8-Φ22	F10-F125	27*27	27
DN200	PN16	340	457	200	268	295	24	2	267	12-Φ22	F125-F140	36*36	36

HIGH-PLATFORM GB FLANGE BALL VALVE
高平台国标法兰球阀

GB DN50-DN200 PN25-PN40

规格	PN	D	L	d	E	G	T	F	H	N-ΦM	A	C	h
DN50	PN25-PN40	165	203	50	102	125	20	2	88	4-Φ18	F05-F07	14*14	14
DN65	PN25-PN40	185	222	65	122	145	22	2	114	8-Φ18	F07-F10	17*17	17
DN80	PN25-PN40	200	241	76	138	160	24	2	124	8-Φ18	F07-F10	17*17	17
DN100	PN25-PN40	235	305	100	162	190	24	2	147	8-Φ22	F07-F10	22*22	22
DN125	PN25-PN40	270	356	125	188	220	26	2	179	8-Φ26	F10-F125	22*22	22
DN150	PN25-PN40	300	394	150	218	250	28	2	207	8-Φ26	F10-F125	27*27	27
DN200	PN25	360	457	200	278	310	30	2	246	12-Φ26	F125-F140	36*36	36
DN200	PN40	375	457	250	285	320	34	2	246	12-Φ30	F125-F140	36*36	36

GB DN15-DN40 PN64-PN100

规格	PN	D	L	d	E	G	T	F	H	N-ΦM	A	C	h
DN15	PN64-100	105	165	15	45	75	20	2	65	4-Φ14	F04-F05	11*11	11
DN20	PN64-100	130	190	20	58	90	22	2	70	4-Φ18	F04-F05	11*11	11
DN25	PN64-100	140	216	25	68	100	24	2	85	4-Φ18	F05-F07	14*14	14
DN32	PN64-100	155	229	32	78	110	26	2	88	4-Φ22	F05-F07	14*14	14
DN40	PN64-100	170	241	40	88	125	28	2	107	4-Φ22	F07-F10	17*17	17

GB DN50-DN100 PN64

规格	PN	D	L	d	E	G	T	F	H	N-ΦM	A	C	h
DN50	PN64	180	282	50	102	135	26	3	107	4-Φ22	F07-F10	17*17	17
DN65	PN64	205	330	65	122	160	26	3	128	8-Φ22	F10-F125	22*22	22
DN80	PN64	215	356	76	138	170	28	3	143	8-Φ22	F10-F125	22*22	22
DN100	PN64	250	406	100	162	220	30	3	165	8-Φ26	F10-F125	22*22	22

GB DN50-DN100 PN100

规格	PN	D	L	d	E	G	T	F	H	N-ΦM	A	C	h
DN50	PN100	195	292	50	102	145	26	3	107	4-Φ22	F07-F10	17*17	17
DN65	PN100	220	330	65	122	170	26	3	128	8-Φ22	F10-F125	22*22	22
DN80	PN100	230	356	76	138	180	28	3	143	8-Φ22	F10-F125	22*22	22
DN100	PN100	265	432	100	162	210	30	3	165	8-Φ26	F10-F125	22*22	22

HIGH-PLATFORM ASME FLANGE BALL VALVE

高平台美标法兰球阀

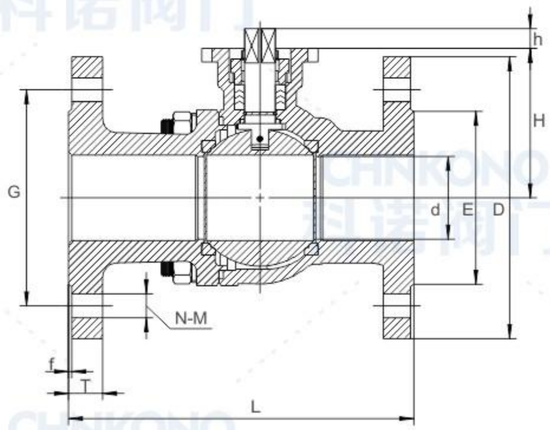

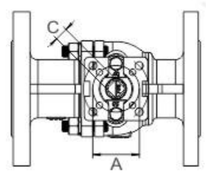

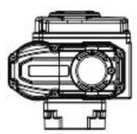

电动执行器附件
Electric actuator accessories

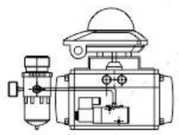

气动执行器附件
Pneumatic actuator accessories

手柄附件
Handle attachment

ASME-1/2"-8"-150LB

规格	PN	D	L	d	E	G	T	F	H	N-ΦM	A	C	h
1/2"	150LB	90	108	15	34.9	60.3	11.6	2	51	4-Φ16	F04-F05	9*9	9
3/4"	150LB	100	117	20	42.9	69.9	13.2	2	55	4-Φ16	F04-F05	9*9	9
1"	150LB	110	127	25	50.8	79.4	14.7	2	63	4-Φ16	F04-F05	11*11	11
1-1/4"	150LB	115	140	32	63.5	88.9	16.3	2	71	4-Φ16	F04-F05	11*11	11
1-1/2"	150LB	125	165	40	73	98.4	17.9	2	81	4-Φ16	F05-F07	14*14	14
2"	150LB	150	178	50	92.1	120.7	19.5	2	88	4-Φ19	F05-F07	14*14	14
2-1/2"	150LB	180	190	65	104.8	139.7	23	2	114	4-Φ19	F07-F10	17*17	17
3"	150LB	190	203	76	127	152.4	24.3	2	124	4-Φ19	F07-F10	17*17	17
4"	150LB	230	229	100	157.2	190.5	24.3	2	147	8-Φ19	F07-F10	22*22	22
5"	150LB	255	356	125	185.7	215.9	24.3	2	179	8-Φ22	F10-F125	22*22	22
6"	150LB	280	394	150	215.9	241.3	26	2	207	8-Φ22	F10-F125	27*27	27
8"	150LB	345	457	200	269.9	298.5	29	2	246	12-Φ22	F125-F140	36*36	36

HIGH-PLATFORM ASME FLANGE BALL VALVE
高平台美标法兰球阀

美标设计标准

法兰连接：ASMEB16.5
结构长度：ASMEB16.10
壁厚标准：ASMEB16.34
设计制造：API6D/608
检验试验：API598

American Design Standards

Flange connection: ASMEB16.5
Structural length: ASMEB16.10
Wall thickness standard: ASMEB16.34
Design and Manufacturing: API6D/608
Inspection and testing: API598

ASME-1/2"-8"-300LB

规格	PN	D	L	d	E	G	T	F	H	N-ΦM	A	C	h
1/2"	300LB	95	140	15	34.9	66.7	14.7	2	51	4-Φ16	F04-F05	9*9	9
3/4"	300LB	115	152	20	42.9	82.6	16.3	2	60	4-Φ19	F04-F05	9*9	9
1"	300LB	125	165	25	50.8	88.9	17.9	2	63	4-Φ19	F04-F05	11*11	11
1-1/4"	300LB	135	178	32	63.5	98.4	19.5	2	71	4-Φ19	F04-F05	11*11	11
1-1/2"	300LB	155	190	40	73	114.3	21.1	2	81	4-Φ22	F05-F07	14*14	14
2"	300LB	165	216	50	92.1	127	22.7	2	88	8-Φ18	F05-F07	14*14	14
2-1/2"	300LB	190	241	65	104.8	149.2	25.9	2	114	8-Φ22	F07-F10	17*17	17
3"	300LB	210	283	76	127	168.3	29	2	124	8-Φ22	F07-F10	17*17	17
4"	300LB	255	305	100	157.2	200	32.2	2	147	8-Φ22	F07-F10	22*22	22
5"	300LB	280	381	125	185.7	235	35.4	2	179	8-Φ22	F10-F125	22*22	22
6"	300LB	320	403	150	215.9	269.9	37	2	207	12-Φ22	F10-F125	27*27	27

ASME-1/2"-8"-600LB

规格	PN	D	L	d	E	G	T	F	H	N-ΦM	A	C	h
1/2"	600LB	95	165	15	34.9	66.7	21.3	7	65	4-Φ16	F04-F05	11*11	11
3/4"	600LB	115	190	20	42.9	82.6	23	7	70	4-Φ16	F04-F05	11*11	11
1"	600LB	125	216	25	50.8	88.9	24.5	7	85	4-Φ16	F05-F07	14*14	14
1-1/4"	600LB	135	229	32	63.5	98.4	27.7	7	88	4-Φ16	F05-F07	14*14	14
1-1/2"	600LB	155	241	40	73	114.3	29.3	7	107	4-Φ16	F07-F10	17*17	17
2"	600LB	165	292	50	92.1	127	32.4	7	107	4-Φ19	F07-F10	17*17	17
2-1/2"	600LB	190	330	65	104.8	149.2	35.6	7	128	4-Φ19	F10-F125	22*22	22
3"	600LB	210	356	76	127	168.3	38.8	7	143	4-Φ19	F10-F125	22*22	22
4"	600LB	275	432	100	157.2	215.9	45	7	165	8-Φ19	F10-F125	22*22	22

HIGH-PLATFORM DIN FLANGE BALL VALVE

高平台德标法兰球阀

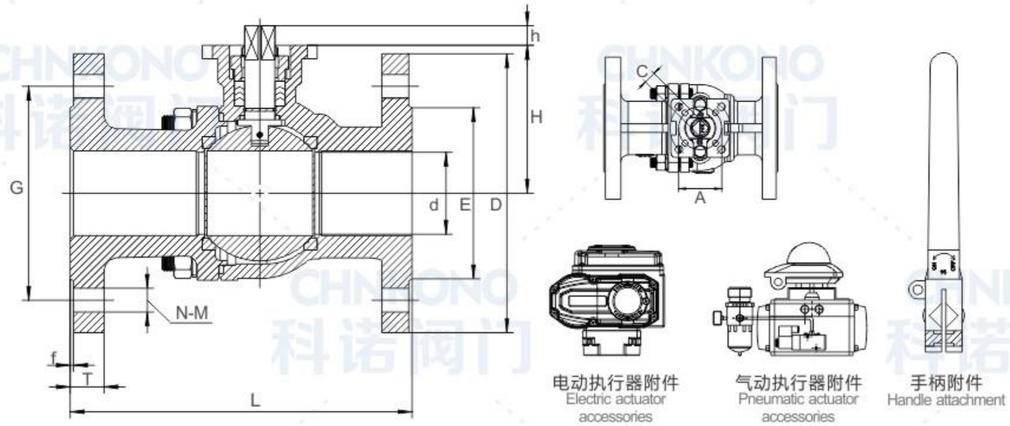

DIN DN15-DN50 PN10-PN40

规格	PN	D	L	d	E	G	T	F	H	N-ΦM	A	C	h
DN15	PN10-40	95	115	15	45	65	16	2	51	4-Φ14	F04-F05	9*9	9
DN20	PN10-40	105	120	20	58	75	18	2	55	4-Φ14	F04-F05	9*9	9
DN25	PN10-40	115	125	25	68	85	18	2	63	4-Φ14	F04-F05	11*11	11
DN32	PN10-40	140	130	32	78	100	18	2	71	4-Φ18	F04-F05	11*11	11
DN40	PN10-40	150	140	40	88	110	18	2	81	4-Φ18	F05-F07	14*14	14
DN50	PN10-40	165	150	50	102	125	20	2	88	4-Φ18	F05-F07	14*14	14

DIN DN65-DN200 PN16

规格	PN	D	L	d	E	G	T	F	H	N-ΦM	A	C	h
DN65	PN16	185	170	65	122	145	18	2	114	4-Φ18	F07-F10	17*17	17
DN80	PN16	200	180	76	138	160	20	2	124	8-Φ18	F07-F10	17*17	17
DN100	PN16	220	190	100	158	180	20	2	147	8-Φ18	F07-F10	22*22	22
DN125	PN16	250	325	125	188	210	22	2	179	8-Φ18	F10-F125	22*22	22
DN150	PN16	285	350	150	212	240	24	2	207	8-Φ22	F10-F125	27*27	27
DN200	PN16	340	400	200	268	295	24	2	246	12-Φ22	F125-F140	36*36	36

DIN DN65-DN200 PN25-PN40

规格	PN	D	L	d	E	G	T	F	H	N-ΦM	A	C	h
DN65	PN25-PN40	185	170	65	122	145	22	2	114	8-Φ18	F07-F10	17*17	17
DN80	PN25-PN40	200	180	76	138	160	24	2	124	8-Φ18	F07-F10	17*17	17
DN100	PN25-PN40	235	190	100	162	190	24	2	147	8-Φ22	F07-F10	22*22	22
DN125	PN25-PN40	270	325	125	188	220	26	2	179	8-Φ26	F10-F125	22*22	22
DN150	PN25-PN40	300	350	150	218	250	28	2	207	8-Φ26	F10-F125	27*27	27
DN200	PN25	360	400	200	278	310	30	2	246	12-Φ26	F125-F140	36*36	36
DN200	PN40	375	400	200	285	320	34	2	246	12-Φ30	F125-F140	36*36	36

HIGH-PLATFORM JIS FLANGE BALL VALVE

高平台日标法兰球阀

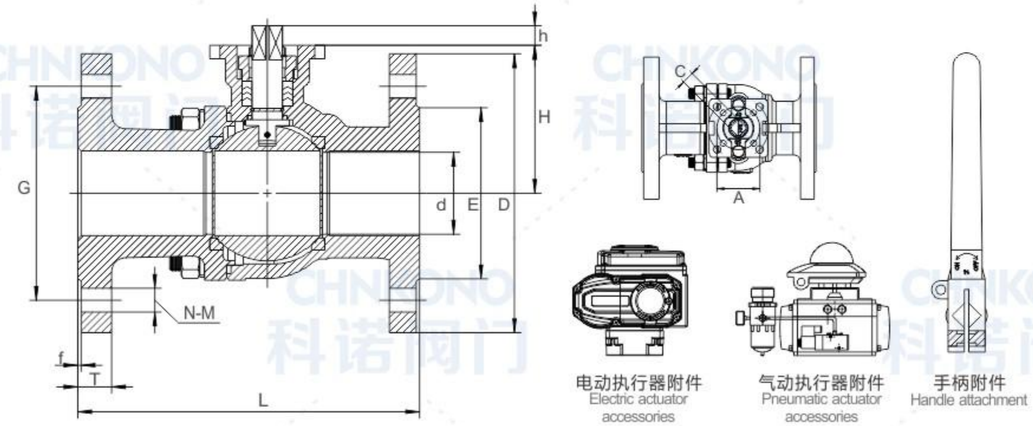

JIS 15A-250A 10K

规格	PN	D	L	d	E	G	T	F	H	N-ΦM	A	C	h
15A	10K	95	108	15	51	70	12	2	51	4-Φ15	F04-F05	9*9	9
20A	10K	100	117	20	56	75	14	2	55	4-Φ15	F04-F05	9*9	9
25A	10K	125	127	25	67	90	14	2	63	4-Φ19	F04-F05	11*11	11
32A	10K	135	140	32	76	100	16	2	71	4-Φ19	F04-F05	11*11	11
40A	10K	140	165	40	81	105	16	2	81	4-Φ19	F05-F07	14*14	14
50A	10K	155	178	50	96	120	16	2	88	4-Φ19	F05-F07	14*14	14
65A	10K	175	190	65	116	140	18	2	114	4-Φ19	F07-F10	17*17	17
80A	10K	185	203	76	126	150	18	2	124	8-Φ19	F07-F10	17*17	17
100A	10K	210	229	100	151	175	18	2	147	8-Φ19	F07-F10	17*17	17
125A	10K	250	356	125	182	210	20	2	179	8-Φ23	F10-F125	22*22	22
150A	10K	280	394	150	212	240	22	2	207	8-Φ23	F10-F125	27*27	27
200A	10K	330	457	200	262	290	22	2	246	12-Φ23	F125-F140	36*36	36
250A	10K	400	533	250	324	355	24	2	299	12-Φ25	F125-F140	36*36	36

JIS 15A-150A 20K

规格	PN	D	L	d	E	G	T	F	H	N-ΦM	A	C	h
15A	20K	95	140	15	51	70	14	2	51	4-Φ15	F04-F05	9*9	9
20A	20K	100	152	20	56	75	16	2	60	4-Φ15	F04-F05	9*9	9
25A	20K	125	165	25	67	90	16	2	63	4-Φ19	F04-F05	11*11	11
32A	20K	135	178	32	76	100	18	2	71	4-Φ19	F04-F05	11*11	11
40A	20K	140	190	40	81	105	18	2	81	4-Φ19	F05-F07	14*14	14
50A	20K	155	216	50	96	120	18	2	88	8-Φ19	F05-F07	14*14	14
65A	20K	175	241	65	116	140	20	2	114	8-Φ19	F07-F10	17*17	17
80A	20K	200	283	76	132	160	22	2	124	8-Φ23	F07-F10	17*17	17
100A	20K	225	305	100	160	185	24	2	147	8-Φ23	F07-F10	22*22	22
125A	20K	270	381	125	195	225	26	2	179	8-Φ25	F10-F125	22*22	22
150A	20K	305	403	150	230	260	28	2	207	12-Φ25	F10-F125	27*27	27

GB HIGH NECK FLANGE BALL VALVE

国标加高颈法兰球阀

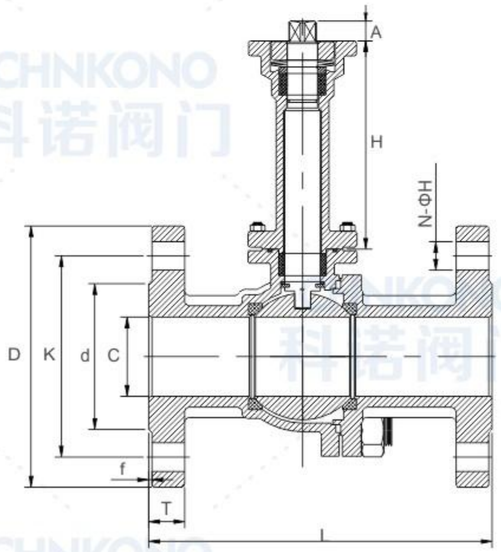

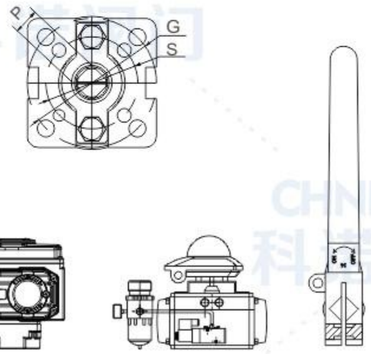

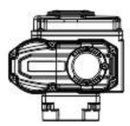

电动执行器附件
Electric actuator accessories

气动执行器附件
Pneumatic actuator accessories

手柄附件
Handle attachment

设计标准

1.结构长度按 GB/T12221-2005
2.设计制造按GB/T12237-2008
3.法兰连接按 HG/T20592-2009
4.检验和试验按 GB/T-26480
5.壁厚标准按GB/T-26640

American Design Standards

1. The structural length shall be in accordance with GB/T12221-2005
2. Design and manufacture according to GB/T12237-2008
3. Flange connection according to HG/T20592-2009
4. Inspection and testing shall be conducted in accordance with GB/T-26480
5. The wall thickness standard shall comply with GB/T-26640

主要连接尺寸 Main connection dimensions

规格	PN	D	K	d	C	N-ΦH	L	T	f	H	A	P	S	G
DN15	PN16-40	95	65	45	15	4-14	130	16	2	100	9	9	36	50
DN20	PN16-40	105	75	58	20	4-14	130	18	2	100	9	9	36	50
DN25	PN16-40	115	85	68	25	4-14	140	18	2	100	11	11	42	50
DN32	PN16-40	140	100	78	32	4-18	165	18	2	100	11	11	42	50
DN40	PN16-40	150	110	88	38	4-18	165	18	2	100	13	14	50	70
DN50	PN16-40	165	125	102	50	4-18	203	18	2	100	13	14	50	70
DN65	PN16	185	145	122	65	8-18	222	18	2	100	18	17	70	102
DN80	PN16	200	160	138	76	8-18	241	20	2	100	18	17	70	102
DN100	PN16	220	180	158	100	8-18	305	20	2	100	22	22	102	102

HIGH-PLATFORM ITALIAN-STYLE WAFER BALL VALVE

高平台意大利式对夹球阀

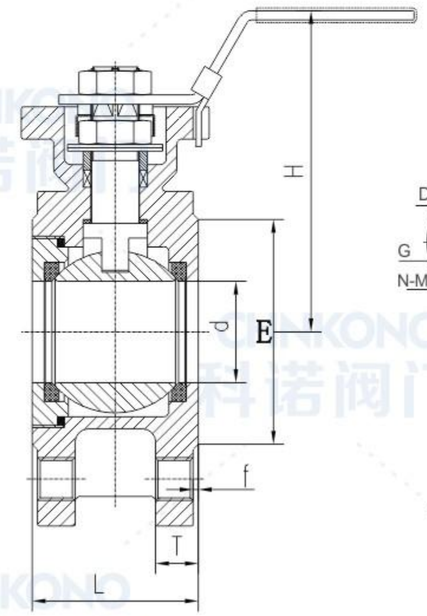

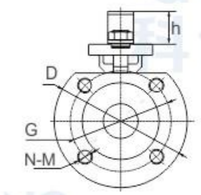

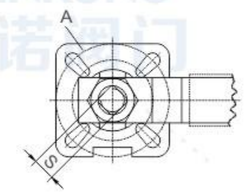

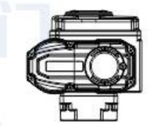

电动执行器附件
Electric actuator accessories

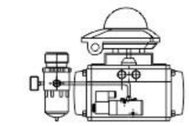

气动执行器附件
Pneumatic actuator accessories

手柄附件
Handle attachment

设计标准

1.结构长度按 GB/T12221-2005
2.设计制造按GB/T12237-2008
3.法兰连接按 HG/T20592-2009
4.检验和试验按 GB/T-26480
5.壁厚标准按GB/T-26640

American Design Standards

1. The structural length shall be in accordance with GB/T12221-2005
2. Design and manufacture according to GB/T12237-2008
3. Flange connection according to HG/T20592-2009
4. Inspection and testing shall be conducted in accordance with GB/T-26480
5. The wall thickness standard shall comply with GB/T-26640

DN15-DN100 PN16-PN40 主要连接尺寸Main connection dimensions

规格	PN	D	L	d	E	G	T	f	H	N-ΦM	A	S	h
DN15	PN16-40	95	42	15	48	65	14	2	70	4-M12	F03-F04	9*9	9
DN20	PN16-40	105	44	20	58	75	16	2	75	4-M12	F03-F04	9*9	9
DN25	PN16-40	115	50	25	68	85	16	2	95	4-M12	F04-F05	11*11	11
DN32	PN16-40	140	60	32	78	100	16	2	100	4-M16	F04-F05	11*11	11
DN40	PN16-40	150	65	36	88	110	16	3	120	4-M16	F05-F07	14*14	14
DN50	PN16-40	165	80	46	102	125	18	3	125	4-M16	F05-F07	14*14	14
DN65	PN16	185	110	57	122	145	18	3	140	4-M16	F07-F10	17*17	17
DN80	PN16	200	120	73	138	160	20	3	155	8-M16	F07-F10	17*17	17
DN100	PN16	220	150	90	158	180	20	3	165	8-M16	F07-F10	19*19	19

HIGH-PLATFORM GB FLUORINE-LINED FLANGE BALL VALVE

高平台国标衬氟法兰球阀

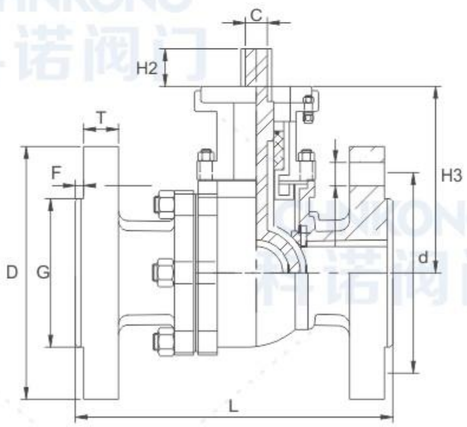

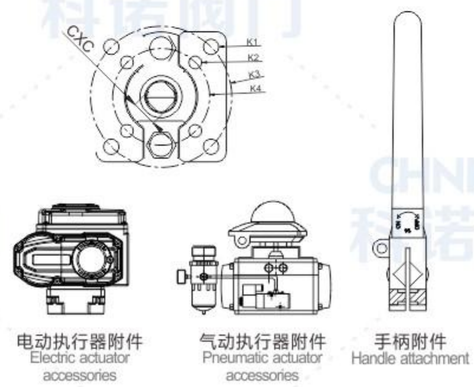

设计标准

1.结构长度按 GB/T12221-2005
2.设计制造按GB/T12237-2008
3.法兰连接按 HG/T20592-2009
4.检验和试验按 GB/T-26480
5.壁厚标准按GB/T-26640

American Design Standards

1. The structural length shall be in accordance with GB/T12221-2005
2. Design and manufacture according to GB/T12237-2008
3. Flange connection according to HG/T20592-2009
4. Inspection and testing shall be conducted in accordance with GB/T-26480
5. The wall thickness standard shall comply with GB/T-26640

主要连接尺寸 Main connection dimensions

规格	L	D	G	f	T	C	K4	K3	K2	K1	H2	d	ΦNX	H3
DN25	140	115	67	3.5	16	11	50	70	7	9	17	85	4-14	85
DN32	165	140	76	3.5	16	11	50	70	7	9	18	100	4-18	93
DN40	165	150	87	3.5	16	14	70	102	9	11	18	110	4-18	99
DN50	203	165	101	4	16	14	70	102	9	11	20	125	4-18	104
DN65	222	185	120	4.5	16	17	102	125	11	13	20	145	8-18	142
DN80	241	200	136	4.5	18	17	102	125	11	13	20	160	8-18	154
DN100	305	220	156	5	18	19	102	125	11	13	22	180	8-18	184
DN125	356	250	186	5	20	27	125	140	16	19	27	210	8-18	220
DN150	394	285	210	5	20	27	125	140	16	19	27	240	8-22	248

GB HIGH PLATFORM THREE-WAY FLANGE BALL VALVE (SQUARE)

国标高平台三通法兰球阀（四方体）

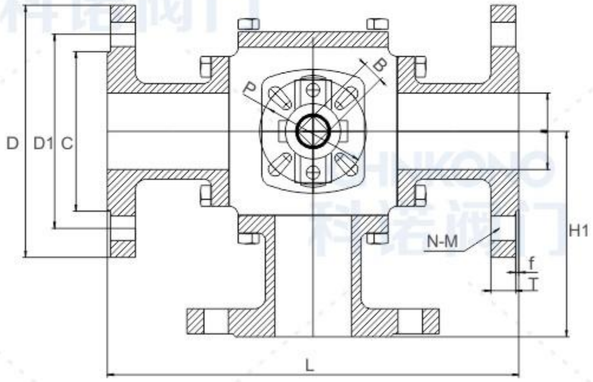

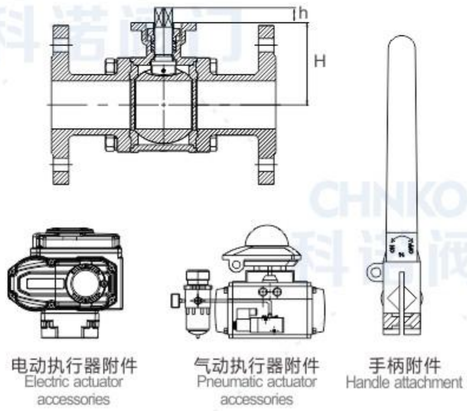

设计标准

1.结构长度按 GB/T12221-2005
2.设计制造按GB/T12237-2008
3.法兰连接按 HG/T20592-2009
4.检验和试验按 GB/T-26480
5.壁厚标准按GB/T-26640

American Design Standards

1. The structural length shall be in accordance with GB/T12221-2005
2. Design and manufacture according to GB/T12237-2008
3. Flange connection according to HG/T20592-2009
4. Inspection and testing shall be conducted in accordance with GB/T-26480
5. The wall thickness standard shall comply with GB/T-26640

主要连接尺寸 Main connection dimensions

规格	d	C	D1	D	L	H1	H	T	f	N-M	h	B	P
DN12	15	45	65	95	165	82.5	65	16	2	4-14	9	9*9	F04-F05
DN20	20	58	75	105	175	87.5	65	18	2	4-14	9	9*9	F04-F05
DN25	25	68	85	115	188	94	68	18	2	4-14	11	11*11	F04-F05
DN32	32	78	100	140	202	101	79	18	2	4-18	11	11*11	F04-F05
DN40	40	88	110	150	228	114	85	18	2	4-18	14	14*14	F05-F07
DN50	50	102	125	165	245	122.5	93	18	2	4-18	14	14*14	F05-F07
DN65	65	122	145	185	290	145	121	20	2	4-18	17	17*17	F07-F10
DN80	76	138	160	200	325	162.5	153	20	2	8-18	17	17*17	F07-F10
DN100	100	158	180	220	368	184	171	22	2	8-18	19	19*19	F07-F10

ASME HIGH PLATFORM THREE-WAY FLANGE BALL VALVE (SQUARE)

美标高平台三通法兰球阀（四方体）

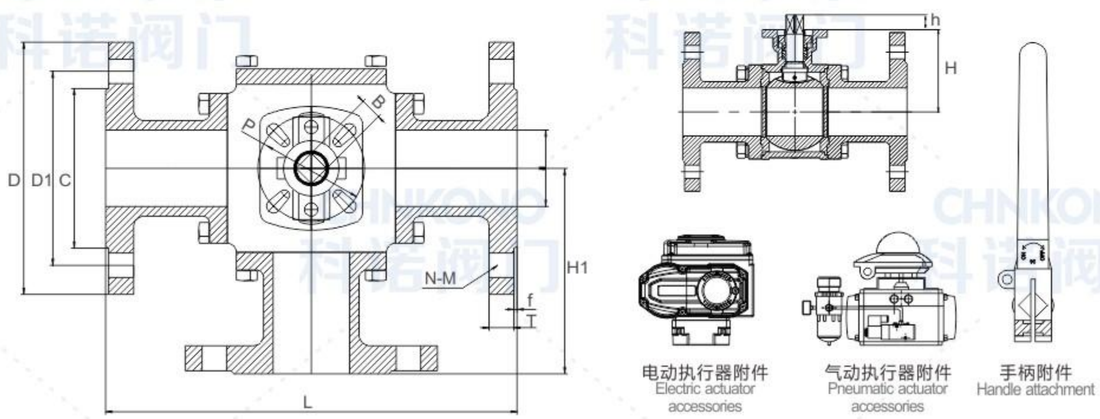

美标设计标准

法兰连接：ASMEB16.5
结构长度：ASMEB16.10
壁厚标准：ASMEB16.34
设计制造：API6D/608
检验试验：API598

American Design Standards

Flange connection: ASMEB16.5
Structural length: ASMEB16.10
Wall thickness standard: ASMEB16.34
Design and Manufacturing: API6D/608
Inspection and testing: API598

主要连接尺寸 Main connection dimensions 150LB

规格	d	C	D1	D	L	H1	H	T	f	N-M	h	B	P
1/2"	15	35	60.3	90	165	82.5	65	11.6	2	4-14	9	9*9	F04-F05
3/4"	20	43	70	100	175	87.5	65	13.2	2	4-14	9	9*9	F04-F05
1"	25	50.8	79.4	110	188	94	68	14.7	2	4-14	11	11*11	F04-F05
1-1/4"	32	63.5	89	115	202	101	79	16.3	2	4-18	11	11*11	F04-F05
1-1/2"	40	73	98.4	125	228	114	85	17.9	2	4-18	14	14*14	F05-F07
2"	50	92.1	120.7	150	252	126	93	19.5	2	4-18	14	14*14	F05-F07
2-1/2"	65	104.8	139.7	180	300	150	121	22.7	2	4-18	17	17*17	F07-F10
3"	76	127	152.4	190	335	167.5	153	24.3	2	8-18	17	17*17	F07-F10
4"	100	157.2	190.5	230	378	189	171	24.3	2	8-18	19	19*19	F07-F10

HARD-SEALED GB FLANGE BALL VALVE

硬密封国标法兰球阀

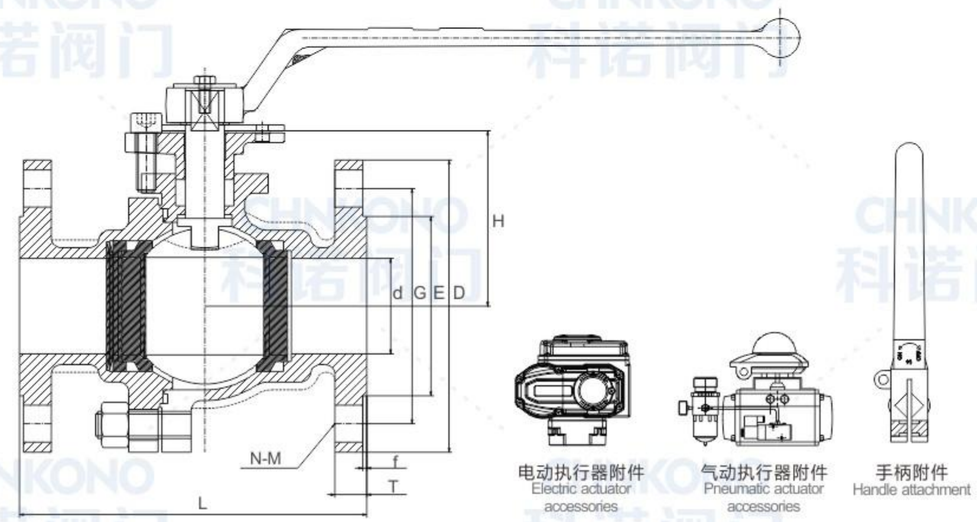

GB DN15-DN40 PN16-PN40

规格	PN	D	L	d	E	G	T	F	H	N-ΦM	A	C	h
DN15	PN16-40	95	130	15	45	65	16	2	51	4-Φ14	F04-F05	9*9	9
DN20	PN16-40	105	130	20	58	75	18	2	54	4-Φ14	F04-F05	9*9	9
DN25	PN16-40	115	140	25	68	85	18	2	67	4-Φ14	F04-F05	11*11	11
DN32	PN16-40	140	165	32	78	100	18	2	72	4-Φ18	F04-F05	11*11	11
DN40	PN16-40	150	165	40	88	110	18	2	78	4-Φ18	F05-F07	14*14	14

GB DN50-DN200 PN16

规格	PN	D	L	d	E	G	T	F	H	N-ΦM	A	C	h
DN50	PN16	165	203	50	102	125	18	2	88	4-Φ18	F05-F07	14*14	14
DN65	PN16	185	222	65	122	145	20	2	116	4-Φ18	F07-F10	17*17	17
DN80	PN16	200	241	76	138	160	20	2	122	8-Φ18	F07-F10	17*17	17
DN100	PN16	220	305	100	158	180	22	2	153	8-Φ18	F07-F10	22*22	22
DN125	PN16	250	356	125	188	210	22	2	174	8-Φ18	F10-F125	22*22	22
DN150	PN16	285	394	150	212	240	24	2	210	8-Φ22	F10-F125	27*27	27
DN200	PN16	340	457	200	268	295	24	2	267	12-Φ22	F125-F140	36*36	36

HARD-SEALED ASME FLANGE BALL VALVE

硬密封美标法兰球阀

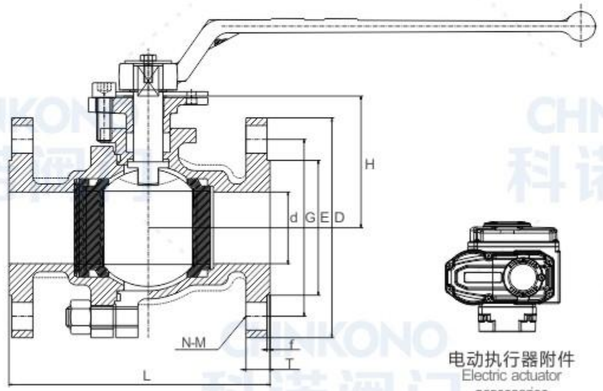

电动执行器附件
Electric actuator accessories

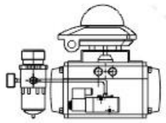

气动执行器附件
Pneumatic actuator accessories

手柄附件
Handle attachment

ASME-1/2″-8″-150LB

规格	PN	D	L	d	E	G	T	F	H	N-ΦM	A	C	h
1/2″	150LB	90	108	15	34.9	60.3	11.6	2	51	4-Φ16	F04-F05	9*9	9
3/4″	150LB	100	117	20	42.9	69.9	13.2	2	55	4-Φ16	F04-F05	9*9	9
1″	150LB	110	127	25	50.8	79.4	14.7	2	63	4-Φ16	F04-F05	11*11	11
1-1/4″	150LB	115	140	32	63.5	88.9	16.3	2	71	4-Φ16	F04-F05	11*11	11
1-1/2″	150LB	125	165	40	73	98.4	17.9	2	81	4-Φ16	F05-F07	14*14	14
2″	150LB	150	178	50	92.1	120.7	19.5	2	88	4-Φ19	F05-F07	14*14	14
2-1/2″	150LB	180	190	65	104.8	139.7	23	2	114	4-Φ19	F07-F10	17*17	17
3″	150LB	190	203	76	127	152.4	24.3	2	124	4-Φ19	F07-F10	17*17	17
4″	150LB	230	229	100	157.2	190.5	24.3	2	147	8-Φ19	F07-F10	22*22	22
5″	150LB	255	356	125	185.7	215.9	24.3	2	179	8-Φ22	F10-F125	22*22	22
6″	150LB	280	394	150	215.9	241.3	26	2	207	8-Φ22	F10-F125	27*27	27
8″	150LB	345	457	200	269.9	298.5	29	2	246	12-Φ22	F125-F140	36*36	36

ASME-1/2″-8″-300LB

规格	PN	D	L	d	E	G	T	F	H	N-ΦM	A	C	h
1/2″	300LB	95	140	15	34.9	66.7	14.7	2	51	4-Φ16	F04-F05	9*9	9
3/4″	300LB	115	152	20	42.9	82.6	16.3	2	60	4-Φ19	F04-F05	9*9	9
1″	300LB	125	165	25	50.8	88.9	17.9	2	63	4-Φ19	F04-F05	11*11	11
1-1/4″	300LB	135	178	32	63.5	98.4	19.5	2	71	4-Φ19	F04-F05	11*11	11
1-1/2″	300LB	155	190	40	73	114.3	21.1	2	81	4-Φ22	F05-F07	14*14	14
2″	300LB	165	216	50	92.1	127	22.7	2	88	8-Φ18	F05-F07	14*14	14
2-1/2″	300LB	190	241	65	104.8	149.2	25.9	2	114	8-Φ22	F07-F10	17*17	17
3″	300LB	210	283	76	127	168.3	29	2	124	8-Φ22	F07-F10	17*17	17
4″	300LB	255	305	100	157.2	200	32.2	2	147	8-Φ22	F07-F10	22*22	22
5″	300LB	280	381	125	185.7	235	35.4	2	179	8-Φ22	F10-F125	22*22	22
6″	300LB	320	403	150	215.9	269.9	37	2	207	12-Φ22	F10-F125	27*27	27

FORGED STEEL (DIE FORGED) FLANGE BALL VALVE

锻钢(模锻)法兰球阀

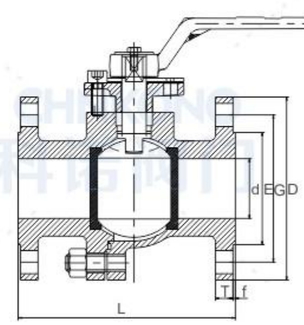

软密封锻钢球阀
Soft-sealed forged steel ball valve

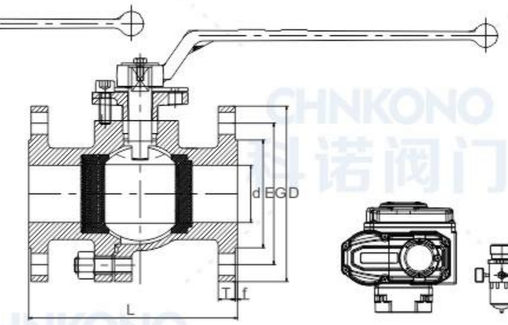

硬密封锻钢球阀
Hard-sealed forged steel ball valve

电动执行器附件
Electric actuator accessories

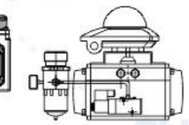

气动执行器附件
Pneumatic actuator accessories

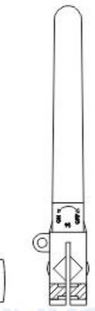

手柄附件
Handle attachment

国标 GB DN15-DN50 PN16-PN40

规格	d	E	G	D	L	T	f	N-M
DN15	15	45	65	95	130	16	2	4-14
DN20	20	58	75	105	130	18	2	4-14
DN25	25	68	85	115	140	18	2	4-Φ4
DN32	32	78	100	140	165	18	2	4-18
DN40	40	88	110	150	165	18	2	4-18
DN50	50	102	125	165	203	20	2	4-18

美标 ASME-1/2″-2″-150LB

规格	d	E	G	D	L	T	f	N-M
1/2″	15	34.9	60.3	90	108	11.6	2	4-16
3/4″	20	42.9	69.9	100	117	13.2	2	4-16
1″	25	50.8	79.4	110	127	14.7	2	4-16
1-1/4″	32	63.5	88.9	115	140	16.3	2	4-16
1-1/2″	40	73	98.4	125	165	17.9	2	4-16
2″	50	92.1	120.7	150	178	19.5	2	4-16

美标 ASME-1/2″-2″-300LB

规格	d	E	G	D	L	T	f	N-M
1/2″	15	34.9	66.7	95	140	14.7	2	4-16
3/4″	20	42.9	82.6	115	152	16.3	2	4-18
1″	25	50.8	88.9	125	165	17.9	2	4-18
1-1/4″	32	63.5	98.4	135	178	19.5	2	4-18
1-1/2″	40	73	114.3	155	190	21.1	2	4-22
2″	50	92.1	127	165	216	22.7	2	8-18

美标 ASME-1/2″-2″-600LB

规格	d	E	G	D	L	T	f	N-M
1/2″	15	34.9	66.7	95	165	21.3	7	4-16
3/4″	20	42.9	82.6	115	190	22.9	7	4-18
1″	25	50.8	88.9	125	216	34.5	7	4-18
1-1/4″	32	63.5	98.4	135	229	27.7	7	4-18
1-1/2″	40	73	114.3	155	241	29.3	7	4-22
2″	50	92.1	127	165	292	32.4	7	8-18

SOFT-SEALED FORGED STEEL (FREE FORGING) FLANGED BALL VALVE

软密封锻钢（自由锻）法兰球阀

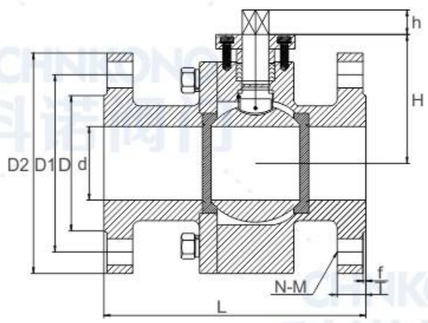

二段式软密封
Two-stage soft seal

电动执行器附件
Electric actuator accessories

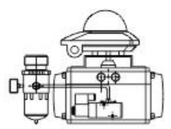

气动执行器附件
Pneumatic actuator accessories

手柄附件
Handle attachment

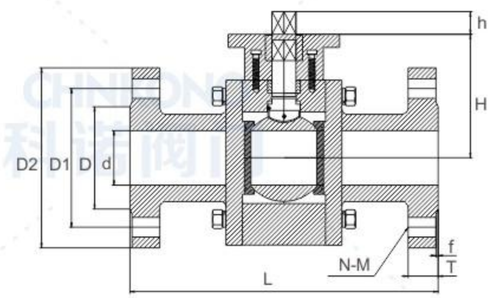

三段式软密封
Three-stage soft seal

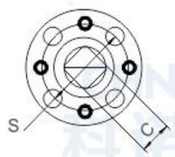

电动执行器附件
Electric actuator accessories

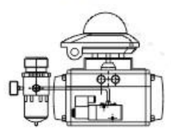

气动执行器附件
Pneumatic actuator accessories

手柄附件
Handle attachment

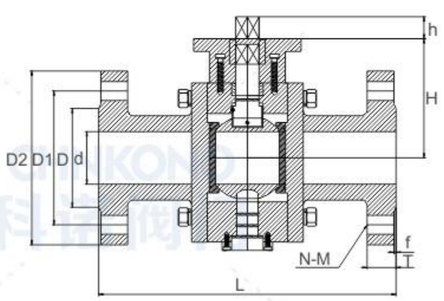

固定式软密封
Fixed soft seal

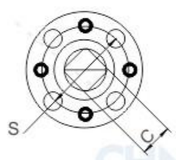

电动执行器附件
Electric actuator accessories

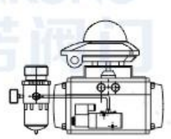

气动执行器附件
Pneumatic actuator accessories

手柄附件
Handle attachment

SOFT-SEALED FORGED STEEL (FREE FORGING) FLANGED BALL VALVE

软密封锻钢（自由锻）法兰球阀

国标 GB/DN15-DN300 PN16

规格	d	D	D1	D2	L	H	h	T	f	N-M	C	S
DN15	15	45	65	95	108	-	9	16	2	4-14	9 * 9	F05
DN20	20	58	75	105	117	-	9	18	2	4-14	9 * 9	F05
DN25	25	68	85	115	127	-	11	18	2	4-14	11 * 11	F07
DN32	32	78	100	140	140	-	11	18	2	4-18	11 * 11	F07
DN40	40	88	110	150	165	-	14	18	2	4-18	14 * 14	F07
DN50	50	102	125	165	178	-	14	18	2	4-18	14 * 14	F07
DN65	65	122	145	185	191	-	17	18	2	8-18	17 * 17	F10
DN80	76	138	160	200	203	-	17	20	2	8-18	17 * 17	F10
DN100	100	158	180	220	229	-	22	20	2	8-18	22 * 22	F12
DN125	125	188	210	250	356	-	22	22	2	8-18	22 * 22	F12
DN150	150	212	240	285	394	-	27	22	2	8-22	27 * 27	F14
DN200	200	268	295	340	457	-	27	24	2	12-22	27 * 27	F16
DN250	250	320	355	405	533	-	36	26	2	12-26	36 * 36	F16
DN300	300	378	410	460	610	-	36	28	2	12-26	36 * 36	F16

国标 GB/DN15-DN300 PN25

规格	d	D	D1	D2	L	H	h	T	f	N-M	C	S
DN15	15	45	65	95	140	-	9	16	2	4 - 14	9 * 9	F05
DN20	20	58	75	105	152	-	9	18	2	4 - 14	9 * 9	F05
DN25	25	68	85	115	165	-	11	18	2	4 - 14	11 * 11	F07
DN32	32	78	100	140	178	-	11	18	2	4 - 18	11 * 11	F07
DN40	40	88	110	150	190	-	14	18	2	4 - 18	14 * 14	F07
DN50	50	102	125	165	216	-	14	20	2	4 - 18	14 * 14	F07
DN65	65	122	145	185	241	-	17	22	2	8 - 18	17 * 17	F10
DN80	76	138	160	200	283	-	17	24	2	8 - 18	17 * 17	F10
DN100	100	162	190	235	305	-	22	24	2	8 - 22	22 * 22	F12
DN125	125	188	220	270	381	-	22	26	2	8 - 26	22 * 22	F12
DN150	150	218	250	300	403	-	27	28	2	8 - 26	27 * 27	F14
DN200	200	278	310	360	502	-	27	30	2	12 - 26	27 * 27	F16
DN250	250	335	370	425	568	-	36	32	2	12 - 30	36 * 36	F16
DN300	300	395	430	485	648	-	36	34	2	16 - 30	36 * 36	F16

国标 GB/DN15-DN300 PN40

规格	d	D	D1	D2	L	H	h	T	f	N-M	C	S
DN15	15	45	65	95	140	-	9	16	2	4-14	9 * 9	F05
DN20	20	58	75	105	152	-	9	18	2	4-14	9 * 9	F05
DN25	25	68	85	115	165	-	11	18	2	4-14	11 * 11	F07
DN32	32	78	100	140	178	-	11	18	2	4-18	11 * 11	F07
DN40	40	88	110	150	190	-	14	18	2	4-18	14 * 14	F07
DN50	50	102	125	165	216	-	14	20	2	4- 18	14 * 14	F07
DN65	65	122	145	185	241	-	17	22	2	8-18	17 * 17	F10
DN80	76	138	160	200	283	-	17	24	2	8-18	17 * 17	F10
DN100	100	162	190	235	305	-	22	24	2	8-22	22 * 22	F12
DN125	125	188	220	270	381	-	22	26	2	8-26	22 * 22	F12
DN150	150	218	250	300	403	-	27	28	2	8-26	27 * 27	F14
DN200	200	285	320	375	502	-	27	34	2	12-30	27 * 27	F16
DN250	250	345	385	450	568	-	36	38	2	12-33	36 * 36	F16
DN300	300	410	450	515	648	-	36	42	2	16-33	36 * 36	F16

SOFT-SEALED FORGED STEEL (FREE FORGING) FLANGED BALL VALVE

软密封锻钢（自由锻）法兰球阀

国标 GB/DN15-DN300 PN63

规格	d	D	D1	D2	L	H	h	T	f	N-M	C	S
DN15	15	45	75	105	165	-	11	20	2	4-14	11 * 11	F05
DN20	20	58	90	130	191	-	11	22	2	4-18	11 * 11	F05
DN25	25	68	100	140	216	-	14	24	2	4-18	14 * 14	F07
DN32	32	78	110	155	229	-	14	24	2	4-22	14 * 14	F07
DN40	40	88	125	170	241	-	17	26	2	4-22	17 * 17	F07
DN50	50	102	135	180	292	-	17	26	2	4-22	17 * 17	F07
DN65	65	122	160	205	330	-	22	26	2	8-22	22 * 22	F10
DN80	76	138	170	215	356	-	22	28	2	8-22	22 * 22	F10
DN100	100	162	200	250	406	-	27	30	2	8-26	27 * 27	F12
DN125	125	188	240	295	432	-	27	34	2	8-30	27 * 27	F12
DN150	150	218	280	345	495	-	36	36	2	8-33	36 * 36	F14
DN200	200	285	345	415	597	-	36	42	2	12-36	36 * 36	F16
DN250	250	345	400	470	673	-	46	46	2	12-36	46 * 46	F16
DN300	300	410	460	530	762	-	46	52	2	16-36	46 * 46	F16

国标 GB/DN15-DN300 PN100

规格	d	D	D1	D2	L	H	h	T	f	N-M	C	S
DN15	15	45	75	105	165	-	11	20	2	4-14	11 * 11	F05
DN20	20	58	90	130	191	-	11	22	2	4-18	11 * 11	F05
DN25	25	68	100	140	216	-	14	24	2	4-18	14 * 14	F07
DN32	32	78	110	155	229	-	14	24	2	4-22	14 * 14	F07
DN40	40	88	125	170	241	-	17	26	2	4-22	17 * 17	F07
DN50	50	102	145	195	292	-	17	28	2	4-26	17 * 17	F07
DN65	65	122	170	220	330	-	22	30	2	8-26	22 * 22	F10
DN80	76	138	180	230	356	-	22	32	2	8-26	22 * 22	F10
DN100	100	162	210	265	432	-	27	36	2	8-30	27 * 27	F12
DN125	125	188	250	315	508	-	27	40	2	8-33	27 * 27	F12
DN150	150	218	290	355	559	-	36	44	2	12-33	36 * 36	F14
DN200	200	285	360	430	660	-	36	52	2	12-36	36 * 36	F16
DN250	250	345	430	505	787	-	46	60	2	12-39	46 * 46	F16
DN300	300	410	500	585	838	-	46	68	2	16-42	46 * 46	F16

国标 GB/DN15-DN300 PN160

规格	d	D	D1	D2	L	H	h	T	f	N-M	C	S
DN15	15	45	75	105	165	-	11	20	2	4-14	11 * 11	F05
DN20	20	58	90	130	190	-	11	24	2	4-18	11 * 11	F05
DN25	25	68	100	140	216	-	14	24	2	4-18	14 * 14	F07
DN32	32	78	110	155	229	-	14	28	2	4-22	14 * 14	F07
DN40	40	88	125	170	241	-	17	28	2	4-22	17 * 17	F07
DN50	50	102	145	195	368	-	17	30	2	4-26	17 * 17	F07
DN65	65	122	170	220	419	-	22	34	2	8-26	22 * 22	F10
DN80	76	138	180	230	381	-	22	36	2	8-26	22 * 22	F10
DN100	100	162	210	265	457	-	27	40	2	8-30	27 * 27	F12
DN125	125	188	250	315	559	-	27	44	2	8-33	27 * 27	F12
DN150	150	218	290	355	610	-	36	50	2	12-33	36 * 36	F14
DN200	200	285	360	430	737	-	36	60	2	12-36	36 * 36	F16
DN250	250	345	430	515	838	-	46	68	2	12-42	46 * 46	F16
DN300	300	410	500	585	965	-	46	78	2	16-42	46 * 46	F16

SOFT-SEALED FORGED STEEL (FREE FORGING) FLANGED BALL VALVE

软密封锻钢（自由锻）法兰球阀

国标 GB/DN15-DN300 PN250

规格	d	D	D1	D2	L	H	h	T	f	N-M	C	S
DN15	15	45	90	130	216	-	14	26	2	4-18	14 * 14	F05
DN20	20	58	95	135	229	-	14	28	2	4-18	14 * 14	F05
DN25	25	68	105	150	254	-	17	28	2	4-22	17 * 17	F07
DN32	32	78	120	165	279	-	17	32	2	4-22	17 * 17	F07
DN40	40	88	135	185	305	-	22	34	3	4-26	22 * 22	F07
DN50	50	102	150	200	368	-	22	38	3	8-26	22 * 22	F07
DN65	65	122	180	230	419	-	27	42	3	8-26	27 * 27	F10
DN80	76	138	200	255	470	-	27	46	3	8-30	27 * 27	F10
DN100	100	162	235	300	546	-	36	54	3	8-33	36 * 36	F12
DN125	125	188	275	340	673	-	36	60	3	12-33	36 * 36	F12
DN150	150	218	320	390	705	-	46	68	3	12-36	46 * 46	F14
DN200	200	285	400	485	832	-	46	82	3	12-42	46 * 46	F16
DN250	250	345	490	585	991	-	55	100	3	16-48	55 * 55	F16
DN300	300				1130	-	55				55 * 55	F16

国标 GB/DN15-DN300 PN320

规格	d	D	D1	D2	L	H	h	T	f	N-M	C	S
DN15	15	45	90	130	264	-	17	26	2	4-18	17 * 17	F05
DN20	20	58	100	145	273	-	17	30	2	4-22	17 * 17	F05
DN25	25	68	115	160	308	-	22	34	2	4-22	22 * 22	F07
DN32	32	78	130	175	349	-	22	36	2	4-26	22 * 22	F07
DN40	40	88	145	195	384	-	27	38	3	4-26	27 * 27	F07
DN50	50	102	160	210	451	-	27	42	3	8-26	27 * 27	F07
DN65	65	122	200	255	508	-	36	51	3	8-30	36 * 36	F10
DN80	76	138	220	275	578	-	36	55	3	8-30	36 * 36	F10
DN100	100	162	265	335	673	-	46	65	3	8-36	46 * 46	F12
DN125	125	188	310	380	794	-	46	75	3	12-36	46 * 46	F12
DN150	150	218	350	425	914	-	55	84	3	12-39	55 * 55	F14
DN200	200	285	440	525	1022	-	55	103	3	16-42	55 * 55	F16
DN250	250	345	540	640	1270	-	55	125	3	16-52	55 * 55	F16
DN300	300	381	571.5	675	1422	-	65				65 * 65	F16

国标 GB/DN15-DN300 PN400

规格	d	D	D1	D2	L	H	h	T	f	N-M	C	S
DN15	15	45	100	145	264	-	17	30	2	4-22	17 * 17	F05
DN20	20	58	115	160	273	-	17	34	2	4-22	17 * 17	F05
DN25	25	68	130	180	308	-	22	38	2	4-26	22 * 22	F07
DN32	32	78	145	200	349	-	22	43	2	4-26	22 * 22	F07
DN40	40	88	165	220	384	-	27	48	3	4-30	27 * 27	F07
DN50	50	102	180	235	451	-	27	52	3	8-30	27 * 27	F07
DN65	65	122	225	290	508	-	36	64	3	8-33	36 * 36	F10
DN80	76	138	240	305	578	-	36	68	3	8-33	36 * 36	F10
DN100	100	162	295	370	673	-	46	80	3	8-39	46 * 46	F12
DN125	125	188	340	415	794	-	46	92	3	12-39	46 * 46	F12
DN150	150	218	390	475	914	-	55	105	3	12-42	55 * 55	F14
DN200	200	285	490	585	1022	-	55	130	3	16-48	55 * 55	F16
DN250	250	323.8	539.8	675	1270	-	55				55 * 55	F16
DN300	300	381	619.1	760	1422	-	65				65 * 65	F16

SOFT-SEALED FORGED STEEL (FREE FORGING) FLANGED BALL VALVE

软密封锻钢（自由锻）法兰球阀

美标 ASME 1/2" -12" 150LB

规格	d	D	D1	D2	L	H	h	T	f	N-M	C	S
1/2"	15	34.9	60.3	90	108	-	9	11.6	2	4-16	9 * 9	F05
3/4"	20	42.9	69.9	100	117	-	9	13.2	2	4-16	9 * 9	F05
1"	25	50.8	79.4	110	127	-	11	14.7	2	4-16	11 * 11	F07
1 1/4"	32	63.5	88.9	115	140	-	11	16.3	2	4-16	11 * 11	F07
1-1/2"	40	73	98.4	125	165	-	14	17.9	2	4-16	14 * 14	F07
2"	50	92.1	120.7	150	178	-	14	19.5	2	4-18	14 * 14	F07
2-1/2"	65	104.8	139.7	180	191	-	17	22.7	2	4-18	17 * 17	F10
3"	76	127	152.4	190	203	-	17	24.3	2	4-18	17 * 17	F10
4"	100	157.2	190.5	230	229	-	22	24.3	2	8-18	22 * 22	F12
5"	125	185.7	215.9	255	356	-	22	24.3	2	8-22	22 * 22	F12
6"	150	215.9	241.3	280	394	-	27	25.9	2	8-22	27 * 27	F14
8"	200	269.9	298.5	345	457	-	27	29	2	8-22	27 * 27	F16
10"	250	323.8	362	405	533	-	36	30.6	2	12-26	36 * 36	F16
12"	300	381	431.8	485	610	-	36	32.2	2	12-26	36 * 36	F16

美标 ASME 1/2" -12" 300LB

规格	d	D	D1	D2	L	H	h	T	f	N-M	C	S
1/2"	15	34.9	66.7	95	140	-	9	14.7	2	4-16	9 * 9	F05
3/4"	20	42.9	82.6	115	152	-	9	16.3	2	4-18	9 * 9	F05
1"	25	50.8	88.9	125	165	-	11	17.9	2	4-18	11 * 11	F07
1 1/4"	32	63.5	98.4	135	178	-	11	19.5	2	4-18	11 * 11	F07
1-1/2"	40	73	114.3	155	190	-	14	21.1	2	4-22	14 * 14	F07
2"	50	92.1	127	165	216	-	14	22.7	2	8-18	14 * 14	F07
2-1/2"	65	104.8	149.2	190	241	-	17	25.9	2	8-22	17 * 17	F10
3"	76	127	168.3	210	283	-	17	29	2	8-22	17 * 17	F10
4"	100	157.2	200	255	305	-	22	32.2	2	8-22	22 * 22	F12
5"	125	185.7	235	280	381	-	22	35.4	2	8-22	22 * 22	F12
6"	150	215.9	269.9	320	403	-	27	37	2	12-22	27 * 27	F14
8"	200	269.9	330.2	380	502	-	27	41.7	2	12-26	27 * 27	F16
10"	250	323.8	387.4	445	568	-	36	48.1	2	16-30	36 * 36	F16
12"	300	381	450.8	520	648	-	36	51.3	2	16-33	36 * 36	F16

美标 ASME 1/2" -12" 600LB

规格	d	D	D1	D2	L	H	h	T	f	N-M	C	S
1/2"	15	34.9	66.7	95	165	-	11	21.3	7	4-16	11 * 11	F05
3/4"	20	42.9	82.6	115	191	-	11	22.9	7	4-18	11 * 11	F05
1"	25	50.8	88.9	125	216	-	14	34.5	7	4-18	14 * 14	F07
1 1/4"	32	63.5	98.4	135	229	-	14	27.7	7	4-8	14 * 14	F07
1-1/2"	40	73	114.3	155	241	-	17	29.3	7	4-22	17 * 17	F07
2"	50	92.1	127	165	292	-	17	32.4	7	8-18	17 * 17	F07
2-1/2"	65	104.8	149.2	190	330	-	22	35.6	7	8-22	22 * 22	F10
3"	76	127	168.3	210	356	-	22	38.8	7	8-22	22 * 22	F10
4"	100	157.2	215.9	275	432	-	27	45.1	7	8-26	27 * 27	F12
5"	125	185.7	266.7	330	508	-	27	51.5	7	8-30	27 * 27	F12
6"	150	215.9	292.1	355	559	-	36	54.7	7	12-30	36 * 36	F14
8"	200	269.9	349.2	420	660	-	36	62.6	7	12-33	36 * 36	F16
10"	250	323.8	431.8	510	787	-	46	70.5	7	16-36	46 * 46	F16
12"	300	381	489	560	838	-	46	73.7	7	20-36	46 * 46	F16

SOFT-SEALED FORGED STEEL (FREE FORGING) FLANGED BALL VALVE

软密封锻钢（自由锻）法兰球阀

美标 ASME 1/2" -12" 900LB

规格	d	D	D1	D2	L	H	h	T	f	N-M	C	S
1/2"	15	34.9	82.6	120	165	-	11	29.3	7	4-22	11 * 11	F05
3/4"	20	42.9	88.9	130	190	-	11	32.4	7	4-22	11 * 11	F05
1"	25	50.8	101.6	150	216	-	14	35.6	7	4-26	14 * 14	F07
1 1/4"	32	63.5	111.1	160	229	-	14	35.6	7	4-26	14 * 14	F07
1-1/2"	40	73	123.8	180	241	-	17	38.8	7	4-30	17 * 17	F07
2"	50	92.1	165.1	215	368	-	17	45.1	7	8-26	17 * 17	F07
2-1/2"	65	104.8	190.5	245	419	-	22	48.3	7	8-30	22 * 22	F10
3"	76	127	190.5	240	381	-	22	45.1	7	8-26	22 * 22	F10
4"	100	157.2	235	290	457	-	27	51.5	7	8-33	27 * 27	F12
5"	125	185.7	279.4	350	559	-	27	57.8	7	8-36	27 * 27	F12
6"	150	215.9	317.5	380	610	-	36	62.6	7	12-33	36 * 36	F14
8"	200	269.9	393.7	470	737	-	36	70.5	7	12-39	36 * 36	F16
10"	250	323.8	469.9	545	838	-	46	76.9	7	16-39	46 * 46	F16
12"	300	381	533.4	610	965	-	46	86.4	7	20-39	46 * 46	F16

美标 ASME 1/2" -12" 1500LB

规格	d	D	D1	D2	L	H	h	T	f	N-M	C	S
1/2"	15	34.9	82.6	120	216	-	14	29.3	7	4-22	14 * 14	F05
3/4"	20	42.9	88.9	130	229	-	14	32.4	7	4-22	14 * 14	F05
1"	25	50.8	101.6	150	254	-	17	35.6	7	4-26	17 * 17	F07
1 1/4"	32	63.5	111.1	160	279	-	17	35.6	7	4-26	17 * 17	F07
1-1/2"	40	73	123.8	180	305	-	22	38.8	7	4-30	22 * 22	F07
2"	50	92.1	165.1	215	368	-	22	45.1	7	8-26	22 * 22	F07
2-1/2"	65	104.8	190.5	245	419	-	27	48.3	7	8-30	27 * 27	F10
3"	76	127	203.2	265	470	-	27	54.7	7	8-33	27 * 27	F10
4"	100	157.2	241.3	310	546	-	36	61	7	8-36	36 * 36	F12
5"	125	185.7	292.1	375	673	-	36	80.1	7	8-42	36 * 36	F12
6"	150	215.9	317.5	395	705	-	46	89.6	7	12-39	46 * 46	F14
8"	200	269.9	393.7	485	832	-	46	99.1	7	12-45	46 * 46	F16
10"	250	323.8	482.6	585	991	-	55	115	7	12-51	55 * 55	F16
12"	300	381	571.5	675	1130	-	55	130.9	7	16-55	55 * 55	F16

美标 ASME 1/2" -12" 2500LB

规格	d	D	D1	D2	L	H	h	T	f	N-M	C	S
1/2"	15	34.9	88.9	135	264	-	17	37.2	7	4-22	17 * 17	F05
3/4"	20	42.9	95.2	140	273	-	17	38.8	7	4-22	17 * 17	F05
1"	25	50.8	108	160	308	-	22	42	7	4-26	22 * 22	F07
1 1/4"	32	63.5	130.2	185	349	-	22	45.1	7	4-30	22 * 22	F07
1-1/2"	40	73	146	205	384	-	27	51.5	7	4-33	27 * 27	F07
2"	50	92.1	171.4	235	451	-	27	57.9	7	8-30	27 * 27	F07
2-1/2"	65	104.8	196.8	265	508	-	36	64.2	7	8-33	36 * 36	F10
3"	76	127	228	305	578	-	36	73.7	7	8-36	36 * 36	F10
4"	100	157.2	273	335	673	-	46	83.2	7	8-42	46 * 46	F12
5"	125	185.7	323.8	420	794	-	46	99.1	7	8-48	46 * 46	F12
6"	150	215.9	368.3	485	914	-	55	115	7	8-55	55 * 55	F14
8"	200	269.9	438.2	550	1022	-	55	134	7	12-55	55 * 55	F16
10"	250	323.8	539.8	675	1270	-	55	172.1	7	12-68	55 * 55	F16
12"	300	381	619.1	760	1422	-	65	191.2	7	12-74	65 * 65	F16

HARD-SEALED FORGED STEEL (FREE FORGING) FLANGED BALL VALVE

硬密封锻钢（自由锻）法兰球阀

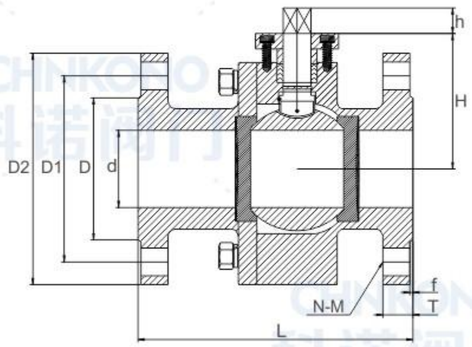

二段式硬密封
Two-stage hard seal

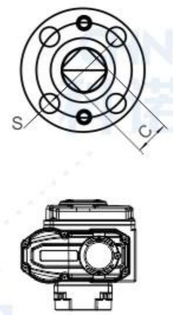

电动执行器附件
Electric actuator accessories

气动执行器附件
Pneumatic actuator accessories

手柄附件
Handle attachment

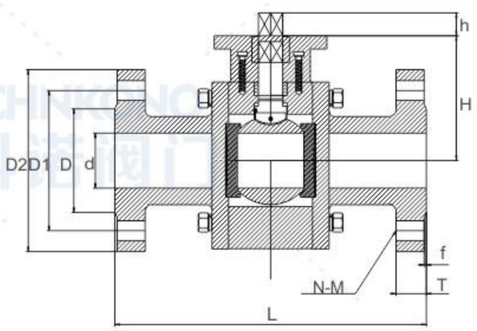

三段式硬密封
Three-stage hard seal

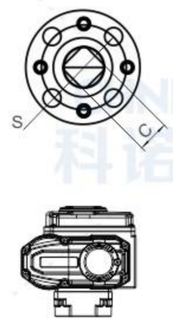

电动执行器附件
Electric actuator accessories

气动执行器附件
Pneumatic actuator accessories

手柄附件
Handle attachment

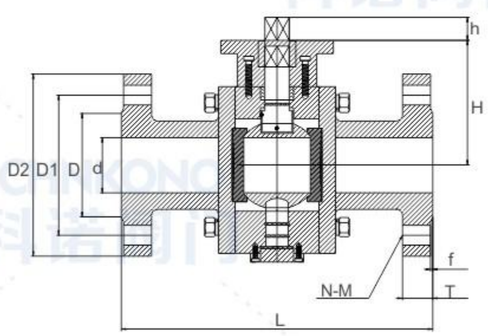

固定式硬密封
Fixed hard seal

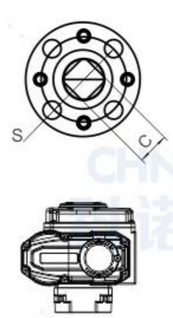

电动执行器附件
Electric actuator accessories

气动执行器附件
Pneumatic actuator accessories

手柄附件
Handle attachment

HARD-SEALED FORGED STEEL (FREE FORGING) FLANGED BALL VALVE

硬密封锻钢（自由锻）法兰球阀

国标 GB/DN15-DN300 PN16

规格	d	D	D1	D2	L	H	h	T	f	N-M	C	S
DN15	15	45	65	95	108	-	9	16	2	4-14	9 * 9	F05
DN20	20	58	75	105	117	-	9	18	2	4-14	9 * 9	F05
DN25	25	68	85	115	127	-	11	18	2	4-14	11 * 11	F07
DN32	32	78	100	140	140	-	11	18	2	4-18	11 * 11	F07
DN40	40	88	110	150	165	-	14	18	2	4-18	14 * 14	F07
DN50	50	102	125	165	178	-	14	18	2	4-18	14 * 14	F07
DN65	65	122	145	185	191	-	17	18	2	8-18	17 * 17	F10
DN80	76	138	160	200	203	-	17	20	2	8-18	17 * 17	F10
DN100	100	158	180	220	229	-	22	20	2	8-18	22 * 22	F12
DN125	125	188	210	250	356	-	22	22	2	8-18	22 * 22	F12
DN150	150	212	240	285	394	-	27	22	2	8-22	27 * 27	F14
DN200	200	268	295	340	457	-	27	24	2	12-22	27 * 27	F16
DN250	250	320	355	405	533	-	36	26	2	12-26	36 * 36	F16
DN300	300	378	410	460	610	-	36	28	2	12-26	36 * 36	F16

国标 GB/DN15-DN300 PN25

规格	d	D	D1	D2	L	H	h	T	f	N-M	C	S
DN15	15	45	65	95	140	-	9	16	2	4 - 14	9 * 9	F05
DN20	20	58	75	105	152	-	9	18	2	4 - 14	9 * 9	F05
DN25	25	68	85	115	165	-	11	18	2	4 - 14	11 * 11	F07
DN32	32	78	100	140	178	-	11	18	2	4 - 18	11 * 11	F07
DN40	40	88	110	150	190	-	14	18	2	4 - 18	14 * 14	F07
DN50	50	102	125	165	216	-	14	20	2	4 - 18	14 * 14	F07
DN65	65	122	145	185	241	-	17	22	2	8 - 18	17 * 17	F10
DN80	76	138	160	200	283	-	17	24	2	8 - 18	17 * 17	F10
DN100	100	162	190	235	305	-	22	24	2	8 - 22	22 * 22	F12
DN125	125	188	220	270	381	-	22	26	2	8 - 26	22 * 22	F12
DN150	150	218	250	300	403	-	27	28	2	8 - 26	27 * 27	F14
DN200	200	278	310	360	502	-	27	30	2	12 - 26	27 * 27	F16
DN250	250	335	370	425	568	-	36	32	2	12 - 30	36 * 36	F16
DN300	300	395	430	485	648	-	36	34	2	16 - 30	36 * 36	F16

国标 GB/DN15-DN300 PN40

规格	d	D	D1	D2	L	H	h	T	f	N-M	C	S
DN15	15	45	65	95	140	-	9	16	2	4-14	9 * 9	F05
DN20	20	58	75	105	152	-	9	18	2	4-14	9 * 9	F05
DN25	25	68	85	115	165	-	11	18	2	4-14	11 * 11	F07
DN32	32	78	100	140	178	-	11	18	2	4-18	11 * 11	F07
DN40	40	88	110	150	190	-	14	18	2	4-18	14 * 14	F07
DN50	50	102	125	165	216	-	14	20	2	4- 18	14 * 14	F07
DN65	65	122	145	185	241	-	17	22	2	8-18	17 * 17	F10
DN80	76	138	160	200	283	-	17	24	2	8-18	17 * 17	F10
DN100	100	162	190	235	305	-	22	24	2	8-22	22 * 22	F12
DN125	125	188	220	270	381	-	22	26	2	8-26	22 * 22	F12
DN150	150	218	250	300	403	-	27	28	2	8-26	27 * 27	F14
DN200	200	285	320	375	502	-	27	34	2	12-30	27 * 27	F16
DN250	250	345	385	450	568	-	36	38	2	12-33	36 * 36	F16
DN300	300	410	450	515	648	-	36	42	2	16-33	36 * 36	F16

HARD-SEALED FORGED STEEL (FREE FORGING) FLANGED BALL VALVE

硬密封锻钢（自由锻）法兰球阀

国标 GB/DN15-DN300 PN63

规格	d	D	D1	D2	L	H	h	T	f	N-M	C	S
DN15	15	45	75	105	165	-	11	20	2	4-14	11 * 11	F05
DN20	20	58	90	130	191	-	11	22	2	4-18	11 * 11	F05
DN25	25	68	100	140	216	-	14	24	2	4-18	14 * 14	F07
DN32	32	78	110	155	229	-	14	24	2	4-22	14 * 14	F07
DN40	40	88	125	170	241	-	17	26	2	4-22	17 * 17	F07
DN50	50	102	135	180	292	-	17	26	2	4-22	17 * 17	F07
DN65	65	122	160	205	330	-	22	26	2	8-22	22 * 22	F10
DN80	76	138	170	215	356	-	22	28	2	8-22	22 * 22	F10
DN100	100	162	200	250	406	-	27	30	2	8-26	27 * 27	F12
DN125	125	188	240	295	432	-	27	34	2	8-30	27 * 27	F12
DN150	150	218	280	345	495	-	36	36	2	8-33	36 * 36	F14
DN200	200	285	345	415	597	-	36	42	2	12-36	36 * 36	F16
DN250	250	345	400	470	673	-	46	46	2	12-36	46 * 46	F16
DN300	300	410	460	530	762	-	46	52	2	16-36	46 * 46	F16

国标 GB/DN15-DN300 PN100

规格	d	D	D1	D2	L	H	h	T	f	N-M	C	S
DN15	15	45	75	105	165	-	11	20	2	4-14	11 * 11	F05
DN20	20	58	90	130	191	-	11	22	2	4-18	11 * 11	F05
DN25	25	68	100	140	216	-	14	24	2	4-18	14 * 14	F07
DN32	32	78	110	155	229	-	14	24	2	4-22	14 * 14	F07
DN40	40	88	125	170	241	-	17	26	2	4-22	17 * 17	F07
DN50	50	102	145	195	292	-	17	28	2	4-26	17 * 17	F07
DN65	65	122	170	220	330	-	22	30	2	8-26	22 * 22	F10
DN80	76	138	180	230	356	-	22	32	2	8-26	22 * 22	F10
DN100	100	162	210	265	432	-	27	36	2	8-30	27 * 27	F12
DN125	125	188	250	315	508	-	27	40	2	8-33	27 * 27	F12
DN150	150	218	290	355	559	-	36	44	2	12-33	36 * 36	F14
DN200	200	285	360	430	660	-	36	52	2	12-36	36 * 36	F16
DN250	250	345	430	505	787	-	46	60	2	12-39	46 * 46	F16
DN300	300	410	500	585	838	-	46	68	2	16-42	46 * 46	F16

国标 GB/DN15-DN300 PN160

规格	d	D	D1	D2	L	H	h	T	f	N-M	C	S
DN15	15	45	75	105	165	-	11	20	2	4-14	11 * 11	F05
DN20	20	58	90	130	190	-	11	24	2	4-18	11 * 11	F05
DN25	25	68	100	140	216	-	14	24	2	4-18	14 * 14	F07
DN32	32	78	110	155	229	-	14	28	2	4-22	14 * 14	F07
DN40	40	88	125	170	241	-	17	28	2	4-22	17 * 17	F07
DN50	50	102	145	195	368	-	17	30	2	4-26	17 * 17	F07
DN65	65	122	170	220	419	-	22	34	2	8-26	22 * 22	F10
DN80	76	138	180	230	381	-	22	36	2	8-26	22 * 22	F10
DN100	100	162	210	265	457	-	27	40	2	8-30	27 * 27	F12
DN125	125	188	250	315	559	-	27	44	2	8-33	27 * 27	F12
DN150	150	218	290	355	610	-	36	50	2	12-33	36 * 36	F14
DN200	200	285	360	430	737	-	36	60	2	12-36	36 * 36	F16
DN250	250	345	430	515	838	-	46	68	2	12-42	46 * 46	F16
DN300	300	410	500	585	965	-	46	78	2	16-42	46 * 46	F16

HARD-SEALED FORGED STEEL (FREE FORGING) FLANGED BALL VALVE

硬密封锻钢（自由锻）法兰球阀

国标 GB/DN15-DN300 PN250

规格	d	D	D1	D2	L	H	h	T	f	N-M	C	S
DN15	15	45	90	130	216	-	14	26	2	4-18	14 * 14	F05
DN20	20	58	95	135	229	-	14	28	2	4-18	14 * 14	F05
DN25	25	68	105	150	254	-	17	28	2	4-22	17 * 17	F07
DN32	32	78	120	165	279	-	17	32	2	4-22	17 * 17	F07
DN40	40	88	135	185	305	-	22	34	3	4-26	22 * 22	F07
DN50	50	102	150	200	368	-	22	38	3	8-26	22 * 22	F07
DN65	65	122	180	230	419	-	27	42	3	8-26	27 * 27	F10
DN80	76	138	200	255	470	-	27	46	3	8-30	27 * 27	F10
DN100	100	162	235	300	546	-	36	54	3	8-33	36 * 36	F12
DN125	125	188	275	340	673	-	36	60	3	12-33	36 * 36	F12
DN150	150	218	320	390	705	-	46	68	3	12-36	46 * 46	F14
DN200	200	285	400	485	832	-	46	82	3	12-42	46 * 46	F16
DN250	250	345	490	585	991	-	55	100	3	16-48	55 * 55	F16
DN300	300				1130	-	55				55 * 55	F16

国标 GB/DN15-DN300 PN320

规格	d	D	D1	D2	L	H	h	T	f	N-M	C	S
DN15	15	45	90	130	264	-	17	26	2	4-18	17 * 17	F05
DN20	20	58	100	145	273	-	17	30	2	4-22	17 * 17	F05
DN25	25	68	115	160	308	-	22	34	2	4-22	22 * 22	F07
DN32	32	78	130	175	349	-	22	36	2	4-26	22 * 22	F07
DN40	40	88	145	195	384	-	27	38	3	4-26	27 * 27	F07
DN50	50	102	160	210	451	-	27	42	3	8-26	27 * 27	F07
DN65	65	122	200	255	508	-	36	51	3	8-30	36 * 36	F10
DN80	76	138	220	275	578	-	36	55	3	8-30	36 * 36	F10
DN100	100	162	265	335	673	-	46	65	3	8-36	46 * 46	F12
DN125	125	188	310	380	794	-	46	75	3	12-36	46 * 46	F12
DN150	150	218	350	425	914	-	55	84	3	12-39	55 * 55	F14
DN200	200	285	440	525	1022	-	55	103	3	16-42	55 * 55	F16
DN250	250	345	540	640	1270	-	55	125	3	16-52	55 * 55	F16
DN300	300	381	571.5	675	1422	-	65				65 * 65	F16

国标 GB/DN15-DN300 PN400

规格	d	D	D1	D2	L	H	h	T	f	N-M	C	S
DN15	15	45	100	145	264	-	17	30	2	4-22	17 * 17	F05
DN20	20	58	115	160	273	-	17	34	2	4-22	17 * 17	F05
DN25	25	68	130	180	308	-	22	38	2	4-26	22 * 22	F07
DN32	32	78	145	200	349	-	22	43	2	4-26	22 * 22	F07
DN40	40	88	165	220	384	-	27	48	3	4-30	27 * 27	F07
DN50	50	102	180	235	451	-	27	52	3	8-30	27 * 27	F07
DN65	65	122	225	290	508	-	36	64	3	8-33	36 * 36	F10
DN80	76	138	240	305	578	-	36	68	3	8-33	36 * 36	F10
DN100	100	162	295	370	673	-	46	80	3	8-39	46 * 46	F12
DN125	125	188	340	415	794	-	46	92	3	12-39	46 * 46	F12
DN150	150	218	390	475	914	-	55	105	3	12-42	55 * 55	F14
DN200	200	285	490	585	1022	-	55	130	3	16-48	55 * 55	F16
DN250	250	323.8	539.8	675	1270	-	55				55 * 55	F16
DN300	300	381	619.1	760	1422	-	65				65 * 65	F16

HARD-SEALED FORGED STEEL (FREE FORGING) FLANGED BALL VALVE

硬密封锻钢（自由锻）法兰球阀

美标 ASME 1/2" -12" 150LB

规格	d	D	D1	D2	L	H	h	T	f	N-M	C	S
1/2"	15	34.9	60.3	90	108	-	9	11.6	2	4-16	9 * 9	F05
3/4"	20	42.9	69.9	100	117	-	9	13.2	2	4-16	9 * 9	F05
1"	25	50.8	79.4	110	127	-	11	14.7	2	4-16	11 * 11	F07
1 1/4"	32	63.5	88.9	115	140	-	11	16.3	2	4-16	11 * 11	F07
1-1/2"	40	73	98.4	125	165	-	14	17.9	2	4-16	14 * 14	F07
2"	50	92.1	120.7	150	178	-	14	19.5	2	4-18	14 * 14	F07
2-1/2"	65	104.8	139.7	180	191	-	17	22.7	2	4-18	17 * 17	F10
3"	76	127	152.4	190	203	-	17	24.3	2	4-18	17 * 17	F10
4"	100	157.2	190.5	230	229	-	22	24.3	2	8-18	22 * 22	F12
5"	125	185.7	215.9	255	356	-	22	24.3	2	8-22	22 * 22	F12
6"	150	215.9	241.3	280	394	-	27	25.9	2	8-22	27 * 27	F14
8"	200	269.9	298.5	345	457	-	27	29	2	8-22	27 * 27	F16
10"	250	323.8	362	405	533	-	36	30.6	2	12-26	36 * 36	F16
12"	300	381	431.8	485	610	-	36	32.2	2	12-26	36 * 36	F16

美标 ASME 1/2" -12" 300LB

规格	d	D	D1	D2	L	H	h	T	f	N-M	C	S
1/2"	15	34.9	66.7	95	140	-	9	14.7	2	4-16	9 * 9	F05
3/4"	20	42.9	82.6	115	152	-	9	16.3	2	4-18	9 * 9	F05
1"	25	50.8	88.9	125	165	-	11	17.9	2	4-18	11 * 11	F07
1 1/4"	32	63.5	98.4	135	178	-	11	19.5	2	4-18	11 * 11	F07
1-1/2"	40	73	114.3	155	190	-	14	21.1	2	4-22	14 * 14	F07
2"	50	92.1	127	165	216	-	14	22.7	2	8-18	14 * 14	F07
2-1/2"	65	104.8	149.2	190	241	-	17	25.9	2	8-22	17 * 17	F10
3"	76	127	168.3	210	283	-	17	29	2	8-22	17 * 17	F10
4"	100	157.2	200	255	305	-	22	32.2	2	8-22	22 * 22	F12
5"	125	185.7	235	280	381	-	22	35.4	2	8-22	22 * 22	F12
6"	150	215.9	269.9	320	403	-	27	37	2	12-22	27 * 27	F14
8"	200	269.9	330.2	380	502	-	27	41.7	2	12-26	27 * 27	F16
10"	250	323.8	387.4	445	568	-	36	48.1	2	16-30	36 * 36	F16
12"	300	381	450.8	520	648	-	36	51.3	2	16-33	36 * 36	F16

美标 ASME 1/2" -12" 600LB

规格	d	D	D1	D2	L	H	h	T	f	N-M	C	S
1/2"	15	34.9	66.7	95	165	-	11	21.3	7	4-16	11 * 11	F05
3/4"	20	42.9	82.6	115	191	-	11	22.9	7	4-18	11 * 11	F05
1"	25	50.8	88.9	125	216	-	14	34.5	7	4-18	14 * 14	F07
1 1/4"	32	63.5	98.4	135	229	-	14	27.7	7	4-8	14 * 14	F07
1-1/2"	40	73	114.3	155	241	-	17	29.3	7	4-22	17 * 17	F07
2"	50	92.1	127	165	292	-	17	32.4	7	8-18	17 * 17	F07
2-1/2"	65	104.8	149.2	190	330	-	22	35.6	7	8-22	22 * 22	F10
3"	76	127	168.3	210	356	-	22	38.8	7	8-22	22 * 22	F10
4"	100	157.2	215.9	275	432	-	27	45.1	7	8-26	27 * 27	F12
5"	125	185.7	266.7	330	508	-	27	51.5	7	8-30	27 * 27	F12
6"	150	215.9	292.1	355	559	-	36	54.7	7	12-30	36 * 36	F14
8"	200	269.9	349.2	420	660	-	36	62.6	7	12-33	36 * 36	F16
10"	250	323.8	431.8	510	787	-	46	70.5	7	16-36	46 * 46	F16
12"	300	381	489	560	838	-	46	73.7	7	20-36	46 * 46	F16

HARD-SEALED FORGED STEEL (FREE FORGING) FLANGED BALL VALVE

硬密封锻钢（自由锻）法兰球阀

美标 ASME 1/2" -12" 900LB

规格	d	D	D1	D2	L	H	h	T	f	N-M	C	S
1/2"	15	34.9	82.6	120	165	-	11	29.3	7	4-22	11 * 11	F05
3/4"	20	42.9	88.9	130	190	-	11	32.4	7	4-22	11 * 11	F05
1"	25	50.8	101.6	150	216	-	14	35.6	7	4-26	14 * 14	F07
1 1/4"	32	63.5	111.1	160	229	-	14	35.6	7	4-26	14 * 14	F07
1-1/2"	40	73	123.8	180	241	-	17	38.8	7	4-30	17 * 17	F07
2"	50	92.1	165.1	215	368	-	17	45.1	7	8-26	17 * 17	F07
2-1/2"	65	104.8	190.5	245	419	-	22	48.3	7	8-30	22 * 22	F10
3"	76	127	190.5	240	381	-	22	45.1	7	8-26	22 * 22	F10
4"	100	157.2	235	290	457	-	27	51.5	7	8-33	27 * 27	F12
5"	125	185.7	279.4	350	559	-	27	57.8	7	8-36	27 * 27	F12
6"	150	215.9	317.5	380	610	-	36	62.6	7	12-33	36 * 36	F14
8"	200	269.9	393.7	470	737	-	36	70.5	7	12-39	36 * 36	F16
10"	250	323.8	469.9	545	838	-	46	76.9	7	16-39	46 * 46	F16
12"	300	381	533.4	610	965	-	46	86.4	7	20-39	46 * 46	F16

美标 ASME 1/2" -12" 1500LB

规格	d	D	D1	D2	L	H	h	T	f	N-M	C	S
1/2"	15	34.9	82.6	120	216	-	14	29.3	7	4-22	14 * 14	F05
3/4"	20	42.9	88.9	130	229	-	14	32.4	7	4-22	14 * 14	F05
1"	25	50.8	101.6	150	254	-	17	35.6	7	4-26	17 * 17	F07
1 1/4"	32	63.5	111.1	160	279	-	17	35.6	7	4-26	17 * 17	F07
1-1/2"	40	73	123.8	180	305	-	22	38.8	7	4-30	22 * 22	F07
2"	50	92.1	165.1	215	368	-	22	45.1	7	8-26	22 * 22	F07
2-1/2"	65	104.8	190.5	245	419	-	27	48.3	7	8-30	27 * 27	F10
3"	76	127	203.2	265	470	-	27	54.7	7	8-33	27 * 27	F10
4"	100	157.2	241.3	310	546	-	36	61	7	8-36	36 * 36	F12
5"	125	185.7	292.1	375	673	-	36	80.1	7	8-42	36 * 36	F12
6"	150	215.9	317.5	395	705	-	46	89.6	7	12-39	46 * 46	F14
8"	200	269.9	393.7	485	832	-	46	99.1	7	12-45	46 * 46	F16
10"	250	323.8	482.6	585	991	-	55	115	7	12-51	55 * 55	F16
12"	300	381	571.5	675	1130	-	55	130.9	7	16-55	55 * 55	F16

美标 ASME 1/2" -12" 2500LB

规格	d	D	D1	D2	L	H	h	T	f	N-M	C	S
1/2"	15	34.9	88.9	135	264	-	17	37.2	7	4-22	17 * 17	F05
3/4"	20	42.9	95.2	140	273	-	17	38.8	7	4-22	17 * 17	F05
1"	25	50.8	108	160	308	-	22	42	7	4-26	22 * 22	F07
1 1/4"	32	63.5	130.2	185	349	-	22	45.1	7	4-30	22 * 22	F07
1-1/2"	40	73	146	205	384	-	27	51.5	7	4-33	27 * 27	F07
2"	50	92.1	171.4	235	451	-	27	57.9	7	8-30	27 * 27	F07
2-1/2"	65	104.8	196.8	265	508	-	36	64.2	7	8-33	36 * 36	F10
3"	76	127	228	305	578	-	36	73.7	7	8-36	36 * 36	F10
4"	100	157.2	273	335	673	-	46	83.2	7	8-42	46 * 46	F12
5"	125	185.7	323.8	420	794	-	46	99.1	7	8-48	46 * 46	F12
6"	150	215.9	368.3	485	914	-	55	115	7	8-55	55 * 55	F14
8"	200	269.9	438.2	550	1022	-	55	134	7	12-55	55 * 55	F16
10"	250	323.8	539.8	675	1270	-	55	172.1	7	12-68	55 * 55	F16
12"	300	381	619.1	760	1422	-	65	191.2	7	12-74	65 * 65	F16

FORGED STEEL SOCKET WELDED BALL VALVE

锻钢承插式焊接球阀

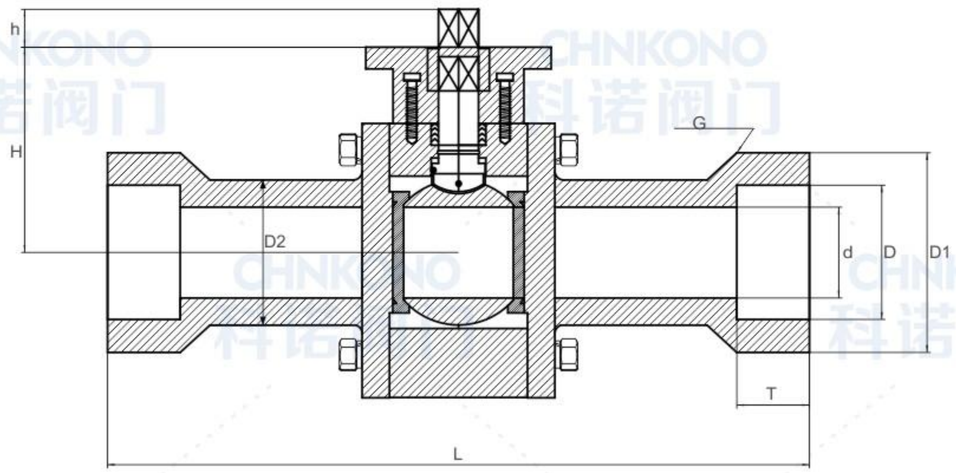

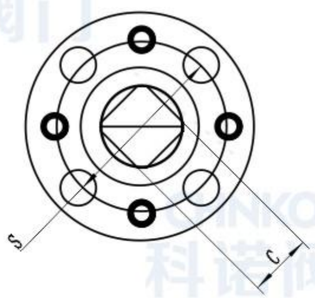

手柄附件
Handle attachment

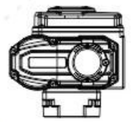

电动执行器附件
Electric actuator accessories

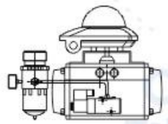

气动执行器附件
Pneumatic actuator accessories

主要外形尺寸表 Main external dimensions table

规格	d	D	D1	D2	T	G	L	H	h	C	S
DN15	15	21.8	33.4	23.8	9.5	45deg	150	-	9	9*9	F05
DN20	20	27.2	38.1	27	12.5	45deg	155	-	9	9*9	F05
DN25	25	33.9	46.1	33.4	12.5	45deg	186	-	11	11*11	F07
DN32	32	42.7	55.6	42.7	12.5	45deg	195	-	11	11*11	F07
DN40	40	48.8	63.5	49.2	12.5	45deg	231	-	14	14*14	F07
DN50	50	61.2	79.4	61.9	16	45deg	243	-	14	14*14	F07
DN65	65	73.9	92.1	73	16	45deg	290	-	17	17*17	F10
DN80	76	89.9	111.1	88.9	16	45deg	302	-	17	17*17	F10
DN100	100	115.2	141.3	114.3	19	45deg	326	-	22	22*22	F12

FORGED STEEL BUTT-WELDED BALL VALVE

锻钢对焊式焊接球阀

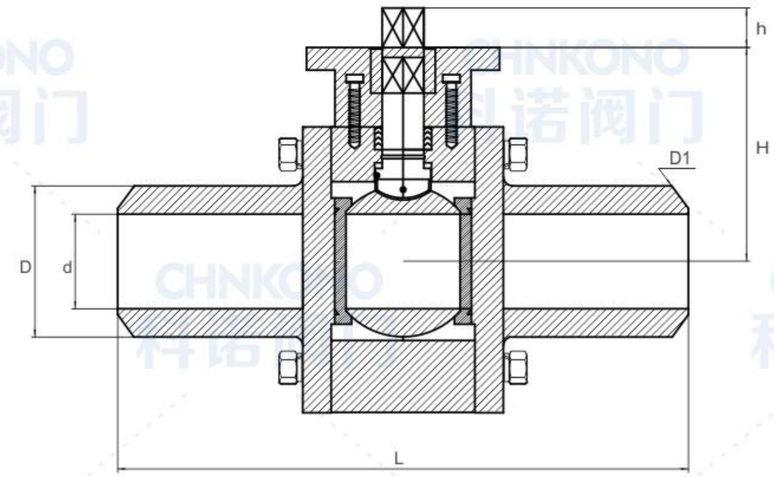

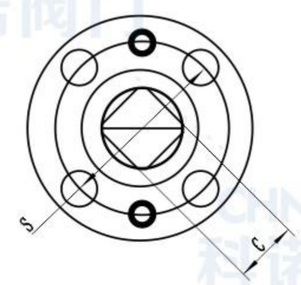

手柄附件
Handle attachment

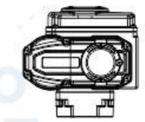

电动执行器附件
Electric actuator accessories

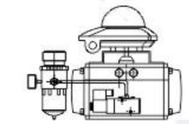

气动执行器附件
Pneumatic actuator accessories

主要外形尺寸表 Main external dimensions table

规格	d	D	D1	L	H	h	C	S
DN15	15	22.2	37.5deg	150	-	9	9*9	F05
DN20	20	29	37.5deg	155	-	9	9*9	F05
DN25	25	35	37.5deg	186	-	11	11*11	F07
DN32	32	42.1	37.5deg	195	-	11	11*11	F07
DN40	40	49.5	37.5deg	231	-	14	14*14	F07
DN50	50	63	37.5deg	243	-	14	14*14	F07
DN65	65	75	37.5deg	290	-	17	17*17	F10
DN80	76	90	37.5deg	302	-	17	17*17	F10
DN100	100	115	37.5deg	326	-	22	22*22	F12

FORGED STEEL INTERNAL THREAD BALL VALVE

锻钢内螺纹球阀

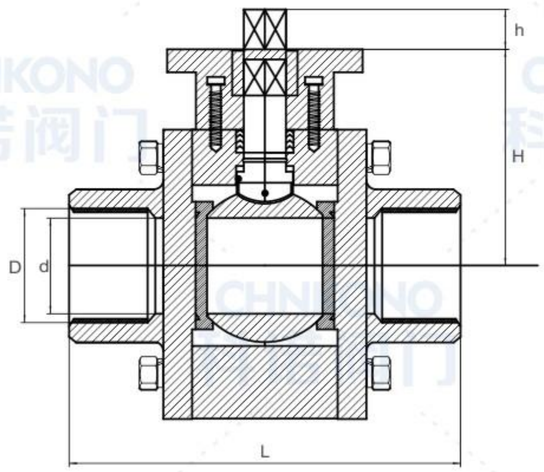

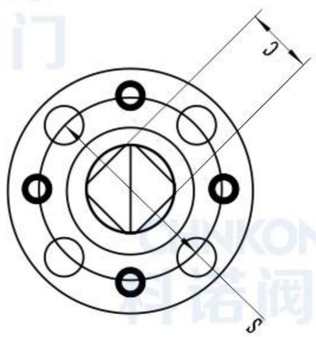

手柄附件
Handle attachment

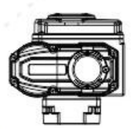

电动执行器附件
Electric actuator accessories

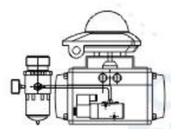

气动执行器附件
Pneumatic actuator accessories

主要外形尺寸表 Main external dimensions table

规格	d	D	L	H	h	C	S
DN15	15	1/2"	90	-	9	9*9	F05
DN20	20	3/4"	100	-	9	9*9	F05
DN25	25	1"	105	-	11	11*11	F07
DN32	32	1 1/4"	130	-	11	11*11	F07
DN40	40	1-1/2"	135	-	14	14*14	F07
DN50	50	2"	160	-	14	14*14	F07
DN65	65	2-1/2"	190	-	17	17*17	F10
DN80	76	3"	220	-	17	17*17	F10
DN100	100	4"	260	-	22	22*22	F12

SCHEMATIC DIAGRAM OF BALL VALVE ENCLOSURE

球阀包围示意图

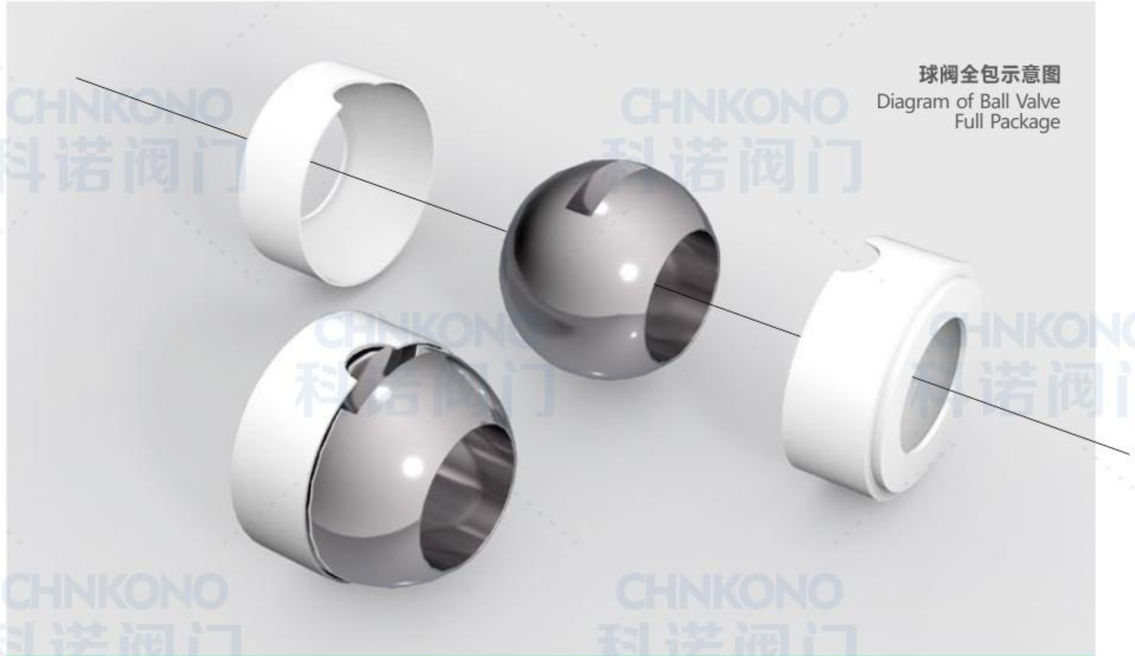

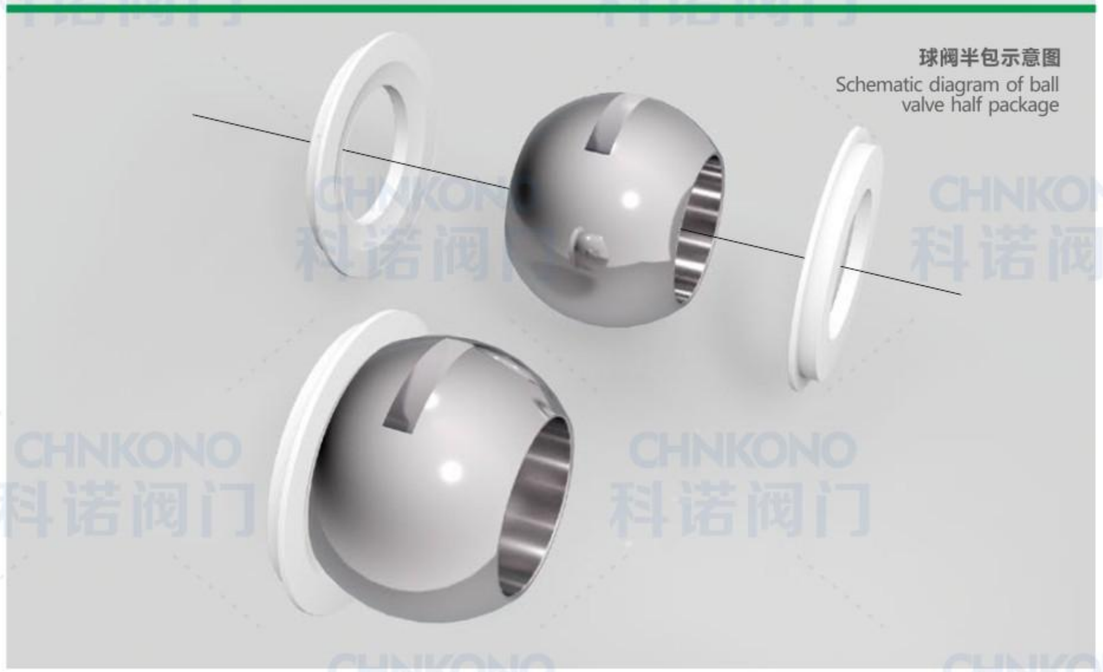

1000WOG HIGH PLATFORM 3PC INTERNAL THREAD BALL VALVE -PN64

1000WOG高平台三片式内螺纹球阀-PN64

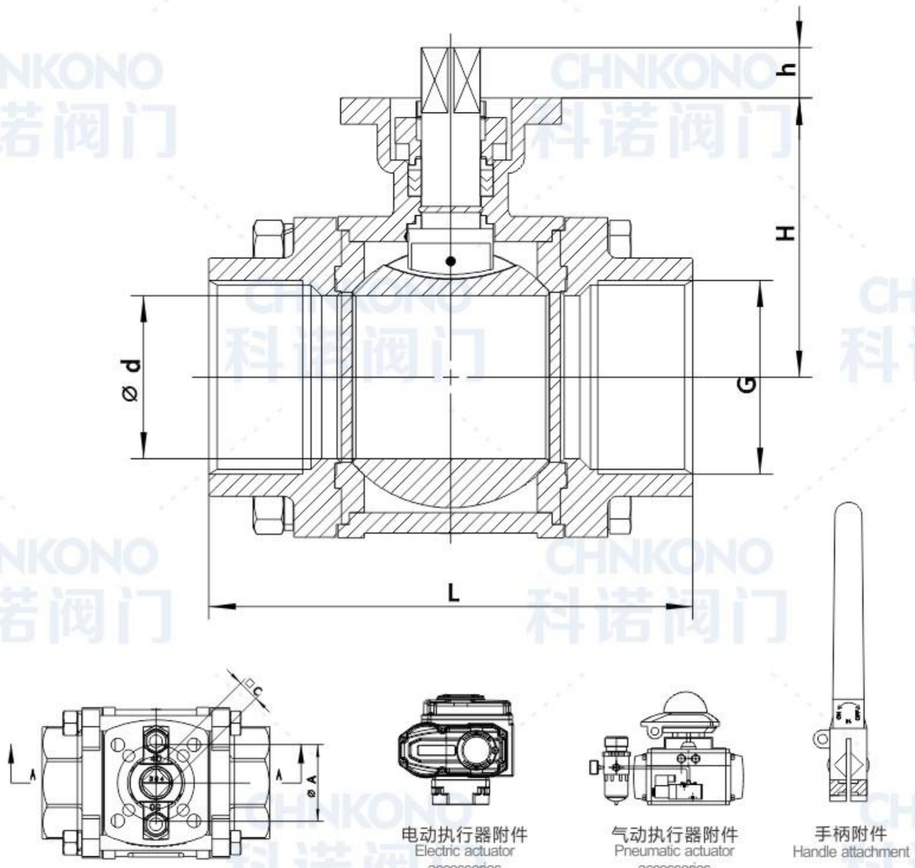

主要外形尺寸表 Main external dimensions table

规格	d	L	G	H	h	C	A
DN15	15	75	1/2"	49.5	9	9*9	F04-F05
DN20	20	85	3/4"	52	9	9*9	F04-F05
DN25	25	90	1"	61	11	11*11	F04-F05
DN32	32	112	1 1/4"	66	11	11*11	F04-F05
DN40	40	120	1-1/2"	76.2	14	14*14	F05-F07
DN50	50	145	2"	85.5	14	14*14	F05-F07
DN65	65	170	2-1/2"	107	17	17*17	F07-F10
DN80	76	200	3"	115.5	17	17*17	F07-F10
DN100	100	240	4"	138	19	19*19	F07-F10

1000WOG HIGH PLATFORM 3PC QUICK-INSTALLATION BALL VALVE -PN64

1000WOG高平台三片式快装球阀-PN64

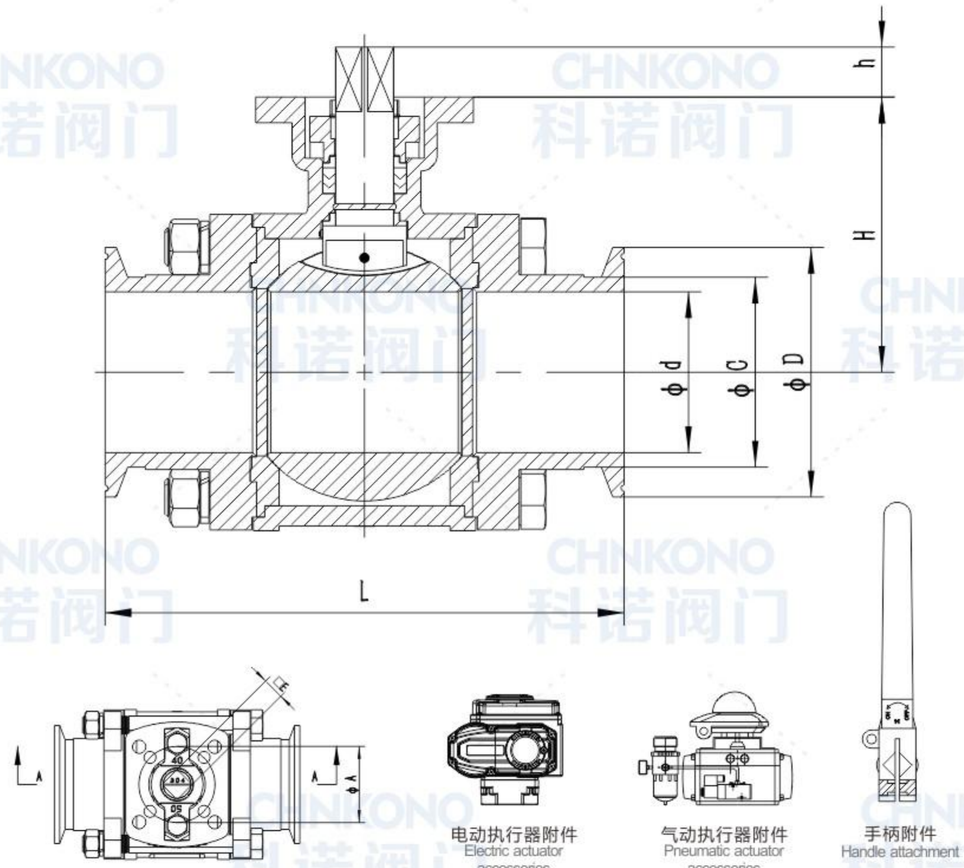

主要外形尺寸表 Main external dimensions table

规格	d	C	D	L	H	h	E	A
DN15	15	19	50.5	97	49.5	9	9*9	F04-F05
DN20	20	25	50.5	109	52	9	9*9	F04-F05
DN25	25	32	50.5	113	61	11	11*11	F04-F05
DN32	32	38	50.5	126	66	11	11*11	F04-F05
DN40	40	42/45	50.5/64	144	76.2	14	14*14	F05-F07
DN50	50	51/57	64/77.5	159	85.5	14	14*14	F05-F07
DN65	65	76	91	180	107	17	17*17	F07-F10
DN80	76	89	106	202	115.5	17	17*17	F07-F10
DN100	100	108	119	248	138	19	19*19	F07-F10

1000WOG HIGH PLATFORM 3PC EXTENDED WELDED BALL VALVE -PN64

1000WOG高平台三片式加长焊接球阀-PN64

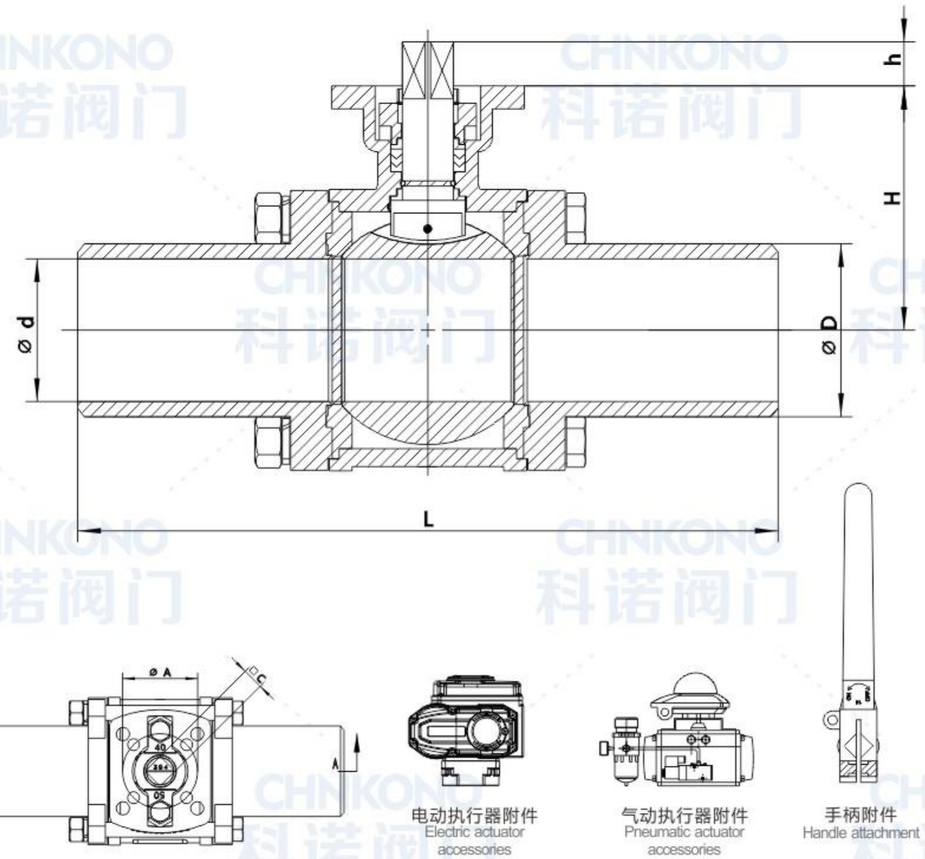

主要外形尺寸表 Main external dimensions table

规格	d	L	D	H	h	C	A
DN15	15	150	22.2	49.5	9	9*9	F04-F05
DN20	20	155	29	52	9	9*9	F04-F05
DN25	25	186	35	61	11	11*11	F04-F05
DN32	32	195	43.1	66	11	11*11	F04-F05
DN40	40	231	49.5	76.2	14	14*14	F05-F07
DN50	50	243	63	85.5	14	14*14	F05-F07
DN65	65	290	77.8	107	17	17*17	F07-F10
DN80	76	302	91.7	115.5	17	17*17	F07-F10
DN100	100	326	117.7	138	19	19*19	F07-F10

1000WOG HIGH PLATFORM 3PC FLANGE BALL VALVE -PN64

1000WOG高平台三片式法兰球阀-PN64

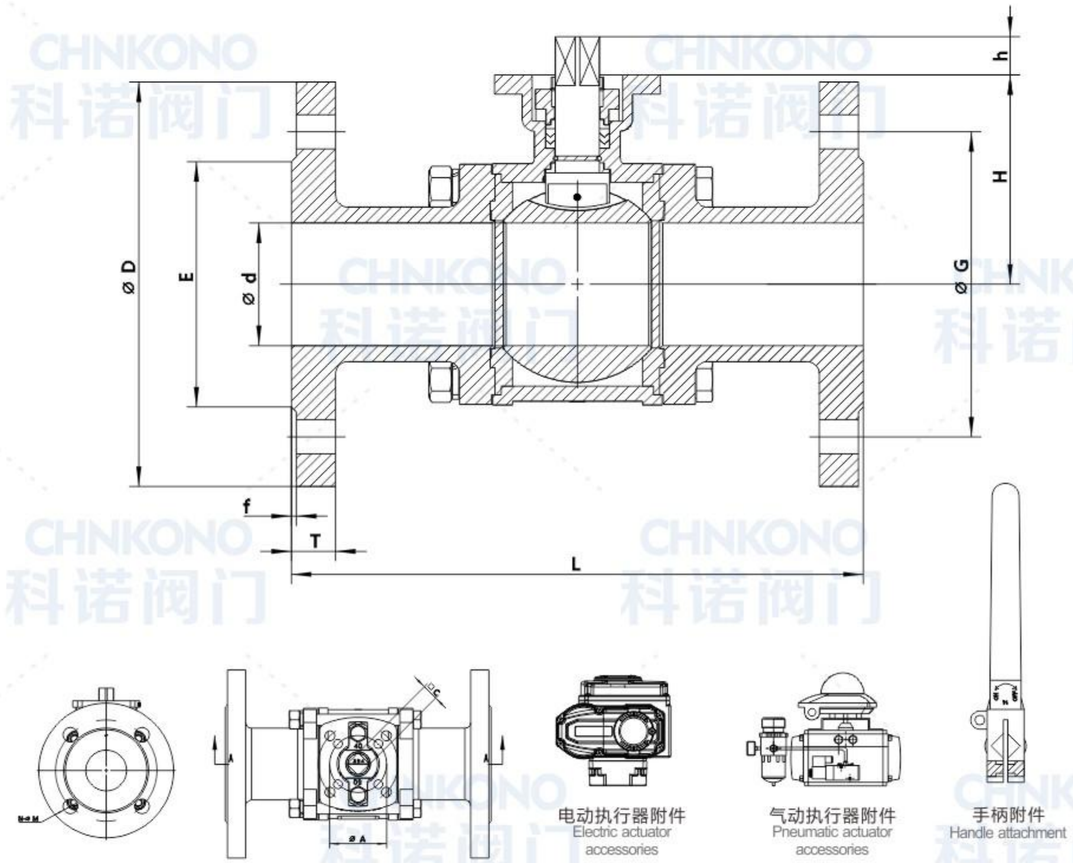

主要外形尺寸表 Main external dimensions table

规格	d	E	D	G	L	H	T	f	N-M	h	C	A
DN15	15	45	95	65	130	49.5	16	2	4-14	9	9*9	F04-F05
DN20	20	58	105	75	150	52	18	2	4-14	9	9*9	F04-F05
DN25	25	67	115	85	160	61	18	2	4-14	11	11*11	F04-F05
DN32	32	77	135	100	180	66	18	2	4-18	11	11*11	F04-F05
DN40	40	86	150	110	200	76.2	18	2	4-18	14	14*14	F05-F07
DN50	50	103	165	125	230	85.5	18	2	4-18	14	14*14	F05-F07
DN65	65	122	180	145	290	107	20	2	4-18	17	17*17	F07-F10
DN80	76	138	200	160	310	115.5	20	2	8-18	17	17*17	F07-F10
DN100	100	162	235	190	350	138	24	2	8-18	19	19*19	F07-F10

2000WOG HIGH PLATFORM 3PC INTERNAL THREAD BALL VALVE -PN120

2000WOG高平台三片式内螺纹球阀-PN120

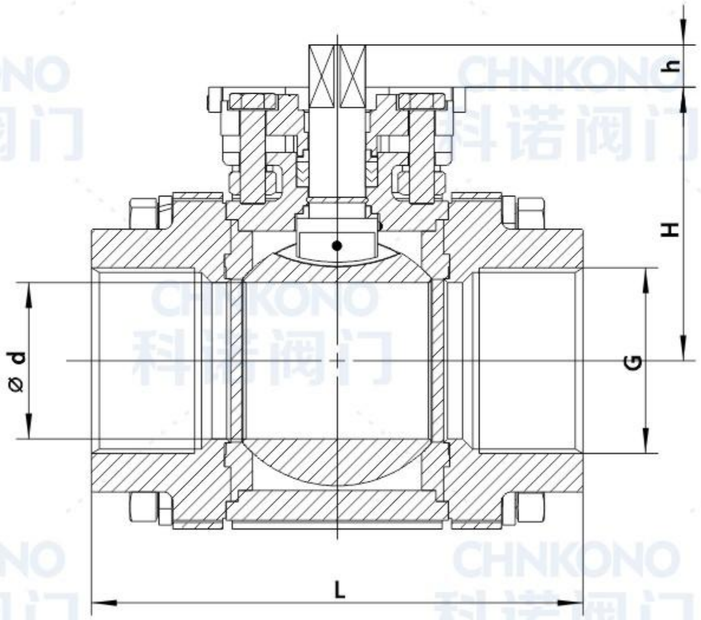

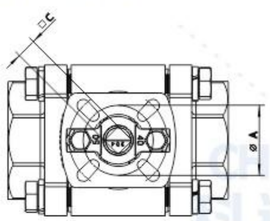

电动执行器附件
Electric actuator accessories

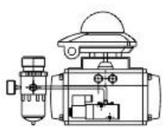

气动执行器附件
Pneumatic actuator accessories

手柄附件
Handle attachment

主要外形尺寸表 Main external dimensions table

规格	d	L	G	H	h	C	A
DN15	15	81	1/2"	50	9	9*9	F04-F05
DN20	20	90	3/4"	54	9	9*9	F04-F05
DN25	25	97	1"	62. 5	11	11*11	F04-F05
DN32	32	112	1 1/4"	67. 5	11	11*11	F04-F05
DN40	40	123	1-1/2"	80	14	14*14	F05-F07
DN50	50	145	2"	87	14	14*14	F05-F07

2000WOG HIGH PLATFORM 3PC SOCKET WELDED BALL VALVE -PN120

2000WOG高平台三片式承插式焊接球阀-PN120

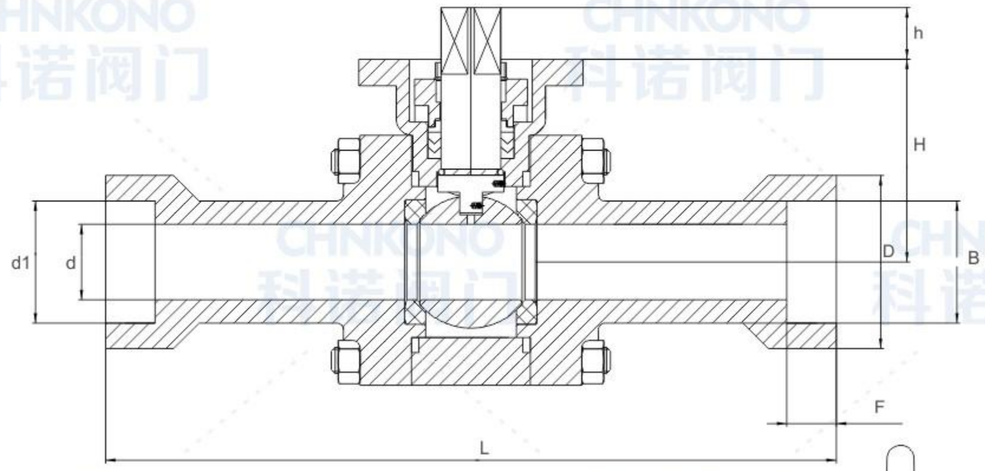

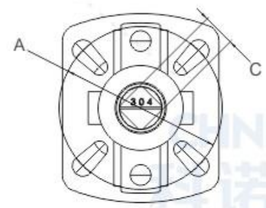

电动执行器附件
Electric actuator accessories

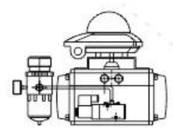

气动执行器附件
Pneumatic actuator accessories

手柄附件
Handle attachment

主要外形尺寸表 Main external dimensions table

规格	d	d1	D	B	L	F	H	h	C	A
DN16	15	21.8	33.4	22.2	200	9.5	50	9	9*9	F04-F05
DN20	20	27.2	38.1	29	210	12.5	54	9	9*9	F04-F05
DN25	25	33.9	46.1	35	220	12.5	62.5	11	11*11	F04-F05
DN32	32	42.7	55.6	43.1	230	12.5	67.5	11	11*11	F04-F05
DN40	40	48.8	63.5	49.5	260	12.5	80	14	14*14	F05-F07
DN50	50	61.2	76.2	63	280	16	87	14	14*14	F05-F07

2000WOG HIGH PLATFORM 3PC EXTENDED WELDED BALL VALVE -PN120

2000WOG高平台三片式加长焊接球阀-PN120

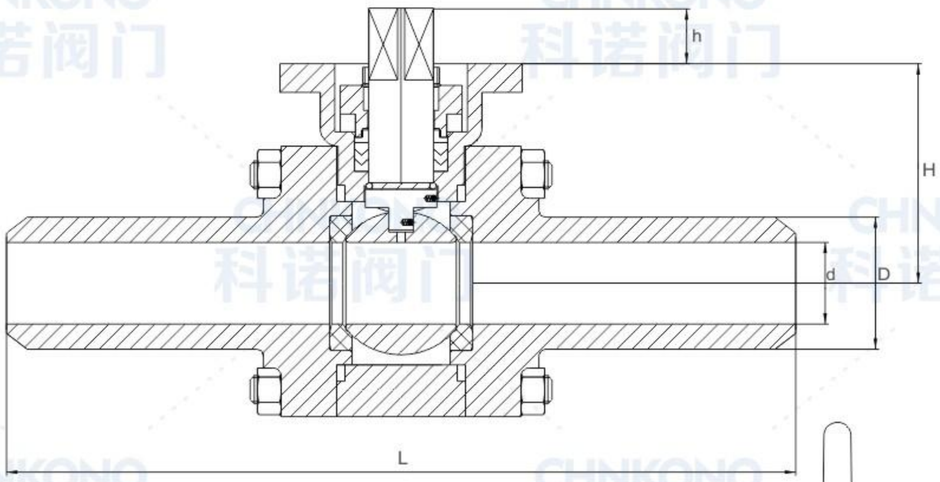

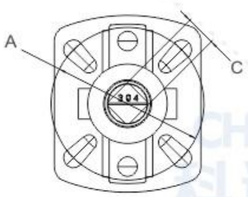

电动执行器附件
Electric actuator accessories

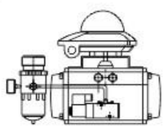

气动执行器附件
Pneumatic actuator accessories

手柄附件
Handle attachment

主要外形尺寸表 Main external dimensions table

规格	d	D	L	H	h	C	A
DN15	15	22.2	200	50	9	9*9	F04-F05
DN20	20	29	210	54	9	9*9	F04-F05
DN25	25	35	220	62. 5	11	11*11	F04-F05
DN32	32	43.1	230	67. 5	11	11*11	F04-F05
DN40	40	49.5	260	80	14	14*14	F05-F07
DN50	50	63	280	87	14	14*14	F05-F07

HIGH-PLATFORM 3PC KF VACUUM BALL VALVE

高平台三片式KF真空球阀

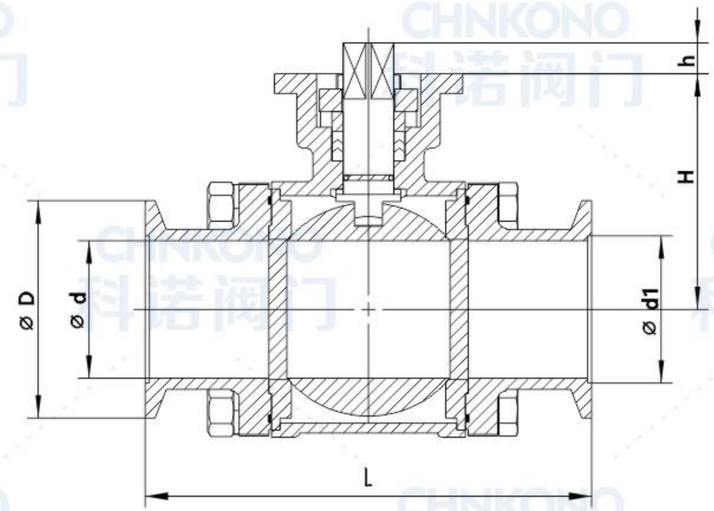

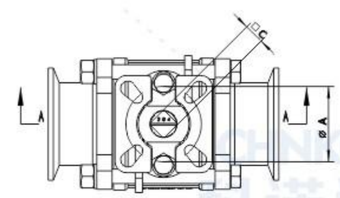

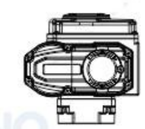

电动执行器附件
Electric actuator accessories

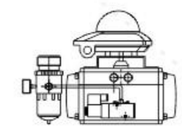

气动执行器附件
Pneumatic actuator accessories

手柄附件
Handle attachment

主要外形尺寸表 Main external dimensions table

规格	d	D	L	d1	H	h	C	A
KF16	15	30	100	17.2	48	9	9*9	F04-F05
KF25	25	40	114	26.2	56	9	9*9	F04-F05
KF40	38	55	165	41.2	75	11	11*11	F04-F05
KF50	49	75	175	52.2	83	11	11*11	F04-F05

HIGH-PLATFORM 3PC ISO VACUUM BALL VALVE

高平台三片式ISO真空球阀

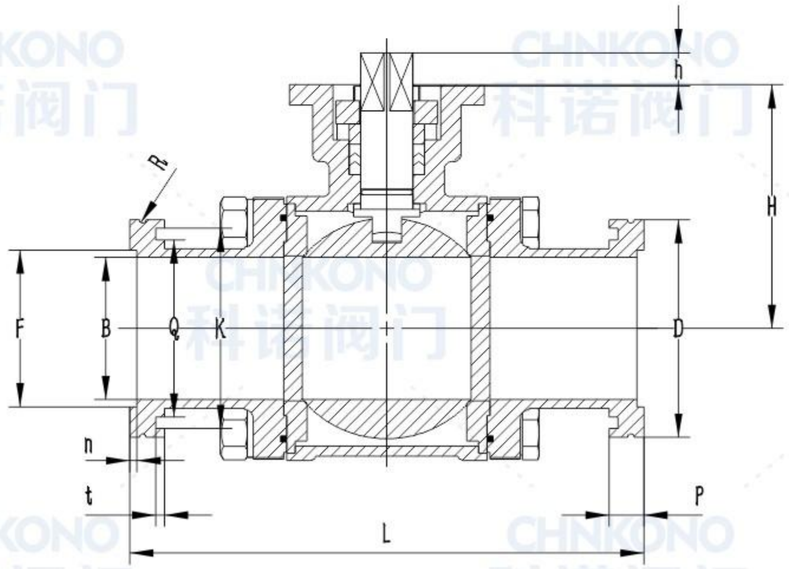

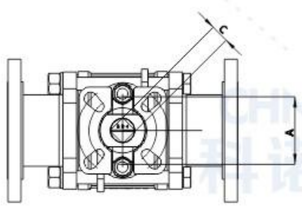

电动执行器附件
Electric actuator accessories

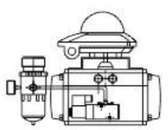

气动执行器附件
Pneumatic actuator accessories

手柄附件
Handle attachment

主要外形尺寸表 Main external dimensions table

规格	B	D	L	P	F	R	Q	K	n	t	H	h	C	A
ISO63	65	95	186	12	70	1.5	80	90	2.5	2	98	17	17*17	F07-F10
ISO80	76	110	198	12	83	1.5	95	105	2.5	2	109	17	17*17	F07-F10
ISO100	100	130	220	12	102	1.5	115	125	2.5	2	112	19	19*19	F07-F10

HIGH-PLATFORM 3PC GU LOOSE FLANGE VACUUM BALL VALVE

高平台三片式GU活套法兰真空球阀

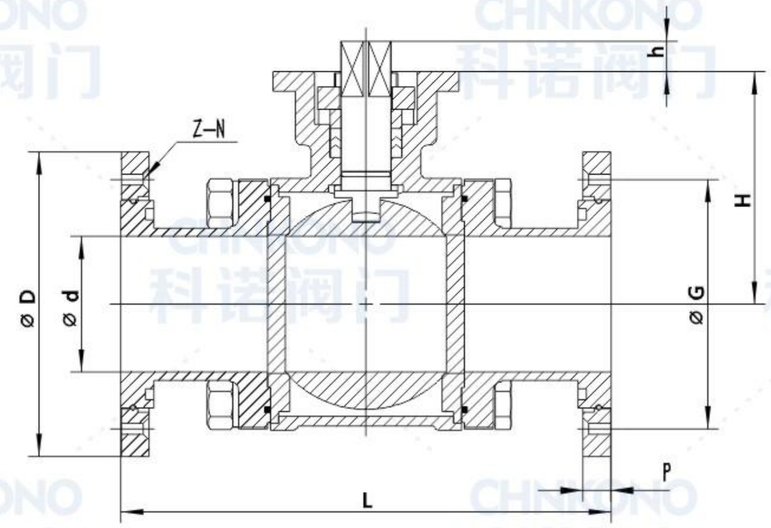

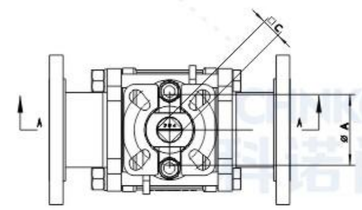

电动执行器附件
Electric actuator accessories

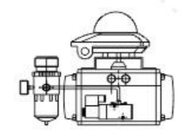

气动执行器附件
Pneumatic actuator accessories

手柄附件
Handle attachment

主要外形尺寸表 Main external dimensions table

规格	d	D	L	P	G	Z-N	H	h	C	A
GU-63	65	130	186	12	110	8*4	98	17	17*17	F07-F10
GU-80	76	145	198	12	125	8*8	109	17	17*17	F07-F10
GU-100	100	165	220	12	145	8*8	112	19	19*19	F07-F10

HIGH-PLATFORM THREE-WAY KF VACUUM BALL VALVE

高平台三通KF真空球阀

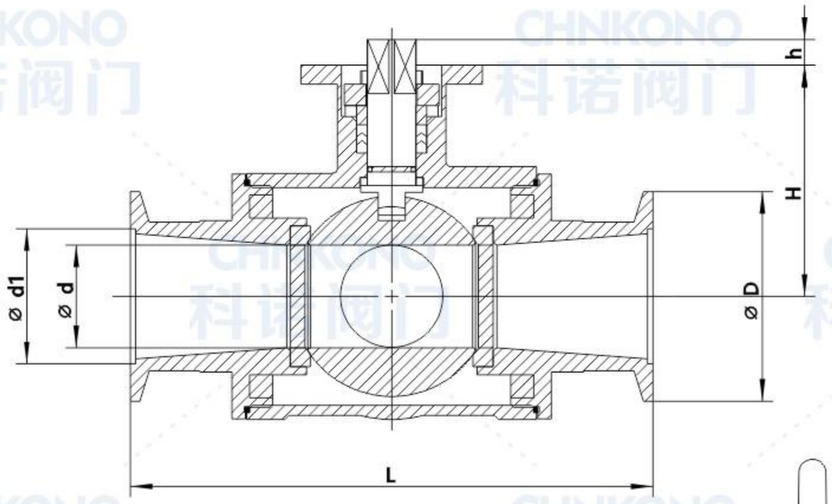

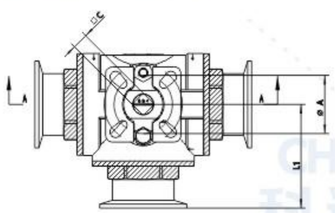

电动执行器附件
Electric actuator accessories

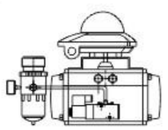

气动执行器附件
Pneumatic actuator accessories

手柄附件
Handle attachment

主要外形尺寸表 Main external dimensions table

规格	d	d1	D	L	L1	H	h	C	A
KF16	12	17.2	30	105	52.25	47.5	9	9*9	F04-F05
KF25	15	26.2	40	117	58.5	54	9	9*9	F04-F05
KF40	18	41.2	55	170	85	79	11	11*11	F04-F05
KF50	25	53.2	75	190	95	86.3	11	11*11	F04-F05

HIGH-PLATFORM 3PC TANK BOTTOM VALVE

高平台三片式罐底阀

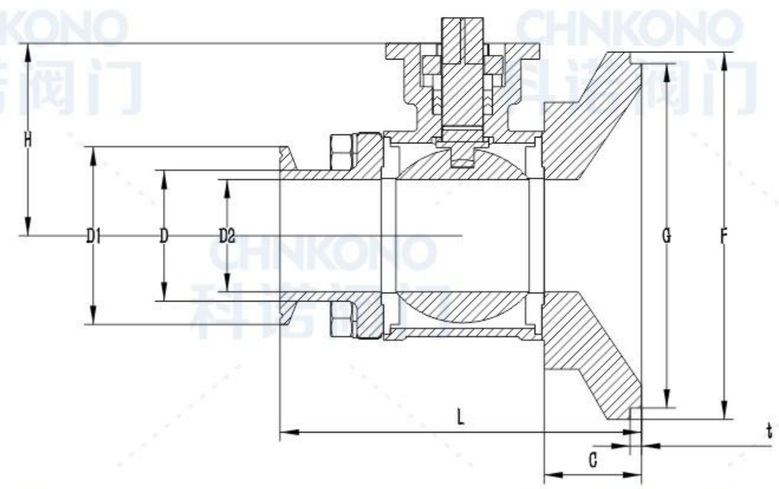

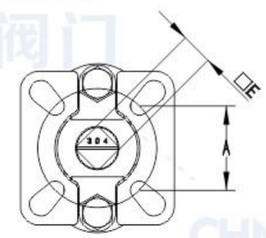

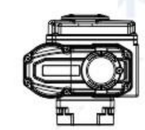

电动执行器附件
Electric actuator accessories

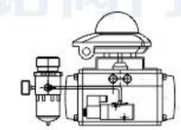

气动执行器附件
Pneumatic actuator accessories

手柄附件
Handle attachment

主要外形尺寸表 Main external dimensions table

规格	D1	D2	D	L	C	F	H	A	E	G	t
DN15	50.5	15	19	86	24	90	48	F04-F05	9*9	86	2
DN20	50.5	20	25	95	24	95	55	F04-F05	9*9	91	2
DN25	50.5	25	32	99	24	115	56	F04-F05	11*11	111	2
DN32	50.5	32	38	109	24	125	62	F04-F05	11*11	121	2
DN40	50.5	38	42	125	26	140	75	F05-F07	14*14	136	2
DN40	64	38	45	125	26	140	75	F05-F07	14*14	136	2
DN50	64	49	51	140	28	150	83	F05-F07	14*14	146	2
DN50	77.5	49	57	140	28	150	83	F05-F07	14*14	146	2
DN65	91	65	76	162	30	200	98	F07-F10	17*17	196	2
DN80	106	80	89	182	32	225	109	F07-F10	17*17	221	2
DN100	119	100	108	217	32	250	112	F07-F10	19*19	246	2

HIGH-PLATFORM THREE-WAY QUICK-INSTALLATION BALL VALVE (SQUARE)

高平台三通快装球阀（四方体）

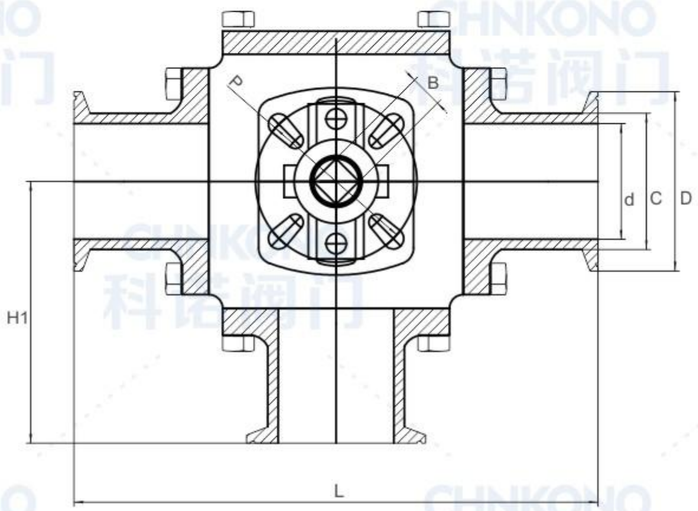

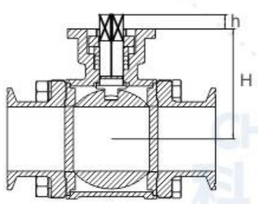

电动执行器附件
Electric actuator accessories

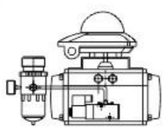

气动执行器附件
Pneumatic actuator accessories

手柄附件
Handle attachment

主要外形尺寸表 Main external dimensions table

规格	d	C	D	L	H	H1	h	B	P
DN15	15	12.7	25.2	110	60	73.3	9	9 * 9	F04-F05
DN20	20	19	25.2	110	68	77.9	9	9 * 9	F04-F05
DN25	25	25.4	50.5	130	72	84.4	11	11 * 11	F04-F05
DN32	32	31.8	50.5	130	88	99	11	11 * 11	F04-F05
DN40	40	38.1	50.5	175	100	110.7	14	14 * 14	F05-F07
DN50	50	50.8	64	220	110	122.3	14	14 * 14	F05-F07
DN65	65	63.5	77.5	240	130	135	17	17 * 17	F07-F10
DN80	76	76.2	91	290	135	145.1	17	17 * 17	F07-F10
DN100	100	101.6	119	330	155	164	19	19 *19	F07-F10

HIGH-PLATFORM 3PC INTERNAL THREAD BALL VALVE -PN16

高平台三片式内螺纹球阀-PN16

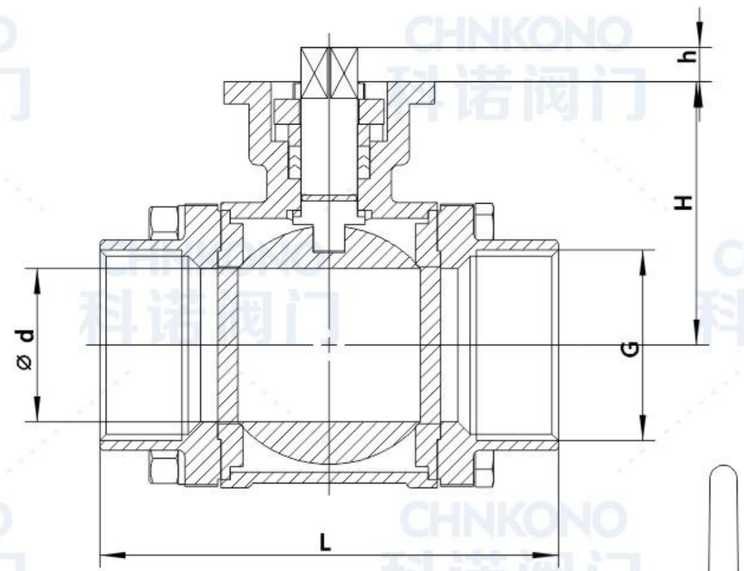

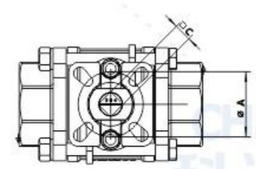

电动执行器附件
Electric actuator accessories

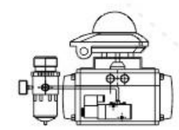

气动执行器附件
Pneumatic actuator accessories

手柄附件
Handle attachment

主要外形尺寸表 Main external dimensions table

规格	D	G	L	H	h	C	A
DN15	15	1/2"	69.5	48	9	9*9	F04-F05
DN20	20	3/4"	84.5	55	9	9*9	F04-F05
DN25	25	1"	87	56	11	11*11	F04-F05
DN32	32	1-1/4"	98.5	62	11	11*11	F04-F05
DN40	40	1-1/2"	111	75	14	14*14	F05-F07
DN50	50	2"	134.5	83	14	14*14	F05-F07
DN65	65	2-1/2"	164	98	17	17*17	F07-F10
DN80	76	3"	191	109	17	17*17	F07-F10
DN100	100	4"	248	112	19	19*19	F07-F10

HIGH-PLATFORM 3PC QUICK-INSTALLATION BALL VALVE -PN16

高平台三片式快装球阀-PN16

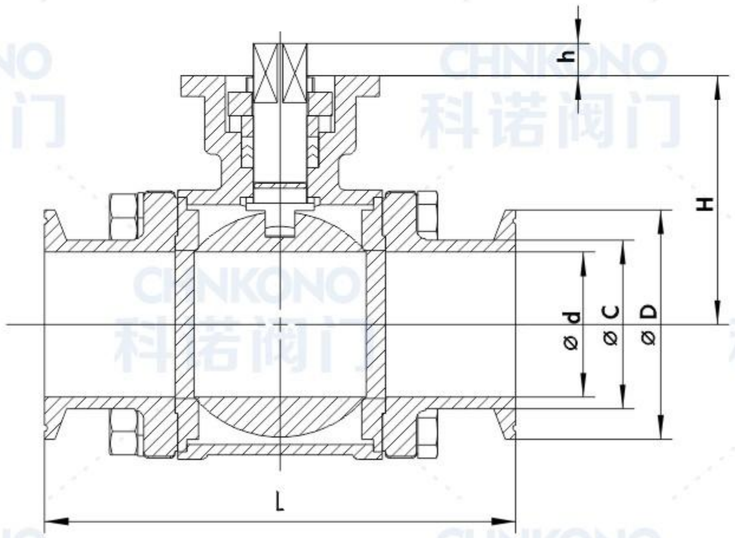

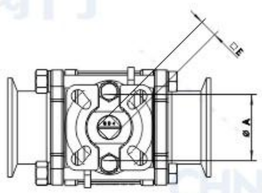

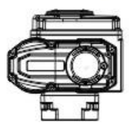

电动执行器附件
Electric actuator accessories

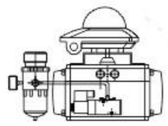

气动执行器附件
Pneumatic actuator accessories

手柄附件
Handle attachment

主要外形尺寸表 Main external dimensions table

规格	d	D	H	L	C	h	A	E
DN15	15	50.5	48	97	19	9	F04-F05	9 * 9
DN20	20	50.5	55	109	25	9	F04-F05	9 * 9
DN25	25	50.5	56	123	32	11	F04-F05	11 * 11
DN32	32	50.5	62	125.5	38	11	F04-F05	11 * 11
DN40	40	50.5/64	75	144	45	14	F05-F07	14 * 14
DN50	50	64/77.5	83	159/157	57	14	F05-F07	14 * 14
DN65	65	91	98	180	76	17	F07-F10	17 * 17
DN80	76	106	109	202	89	17	F07-F10	17 * 17
DN100	100	119	112	248	108	19	F07-F10	19 *19

HIGH-PLATFORM THREE-WAY INTERNAL THREAD BALL VALVE -PN16

高平台三通内螺纹球阀-PN16

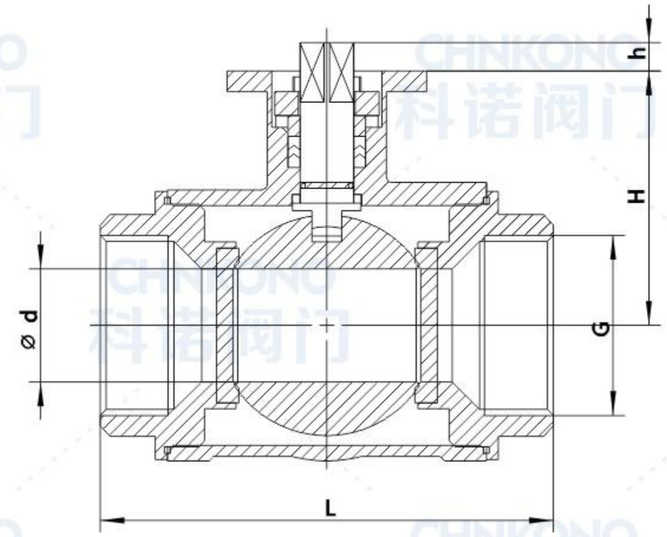

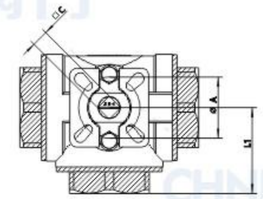

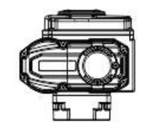

电动执行器附件
Electric actuator accessories

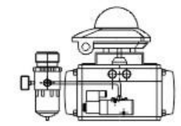

气动执行器附件
Pneumatic actuator accessories

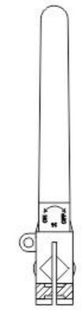

手柄附件
Handle attachment

主要外形尺寸表 Main external dimensions table

规格	d	G	L	H	L1	h	C	A
DN15	12	1/2"	70	35	47.5	9	9*9	F04-F05
DN20	15	3/4"	84.5	42.25	50.5	9	9*9	F04-F05
DN25	18	1"	90	45	54	11	11*11	F04-F05
DN32	25	1-1/4"	122.4	61.25	65	11	11*11	F04-F05
DN40	32	1-1/2"	140	70	79	14	14*14	F05-F07
DN50	38	2"	153	76.5	86.3	14	14*14	F05-F07

HIGH-PLATFORM THREE-WAY QUICK-INSTALLATION BALL VALVE -PN16

高平台三通快装球阀-PN16

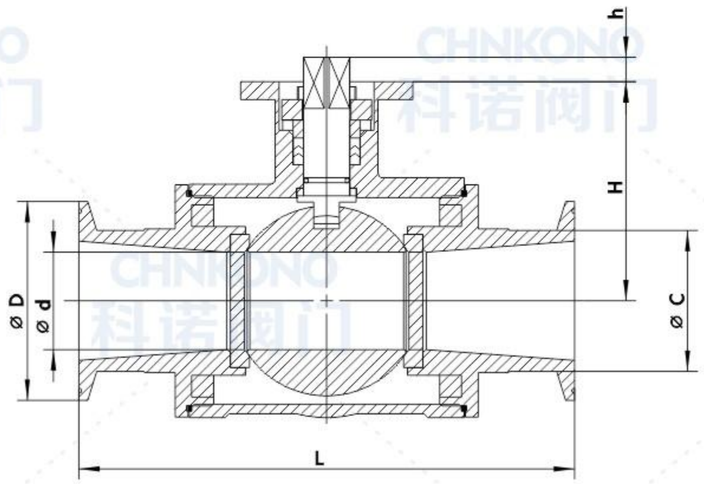

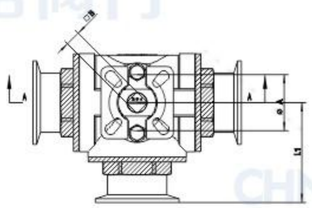

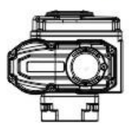

电动执行器附件
Electric actuator accessories

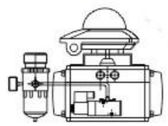

气动执行器附件
Pneumatic actuator accessories

手柄附件
Handle attachment

主要外形尺寸表 Main external dimensions table

规格	d	D	C	L	L1	H	h	B	A
DN15	12	50.5	19	104. 4	52.2	47. 5	9	9*9	F04-F05
DN20	15	50.5	25	114	57	50. 5	9	9*9	F04-F05
DN25	18	50.5	32	116	58	54	11	11*11	F04-F05
DN32	25	50.5	38	145	72.5	65	11	11*11	F04-F05
DN40	32	50.5/64	45	170	85	79	14	14*14	F05-F07
DN50	38	64/77.5	57	190	95	86. 3	14	14*14	F05-F07